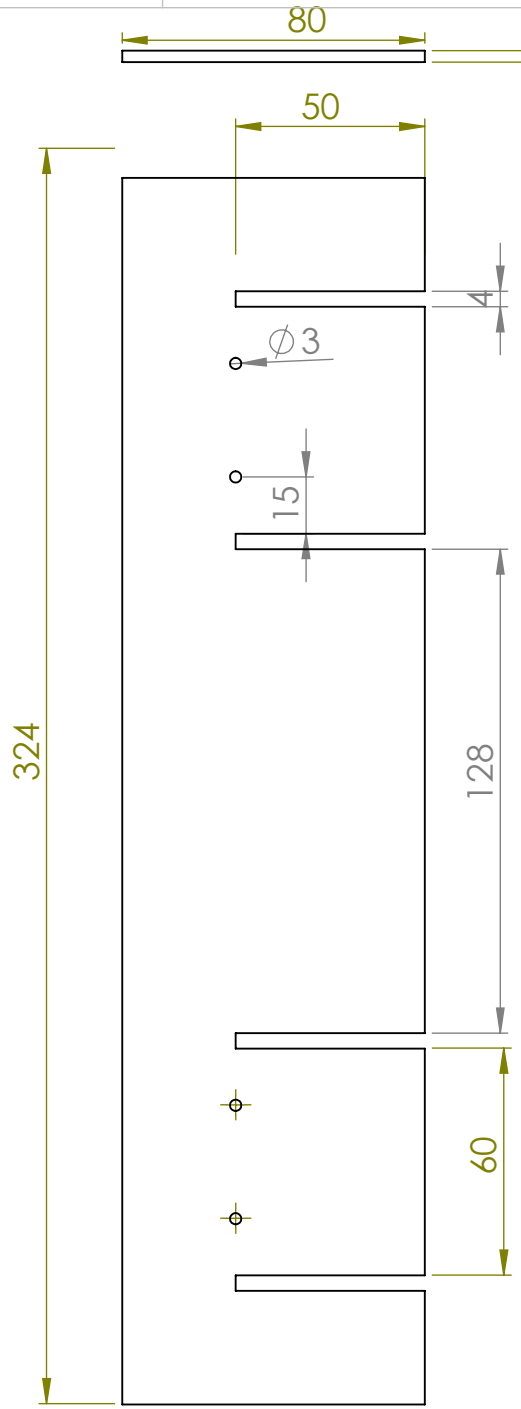


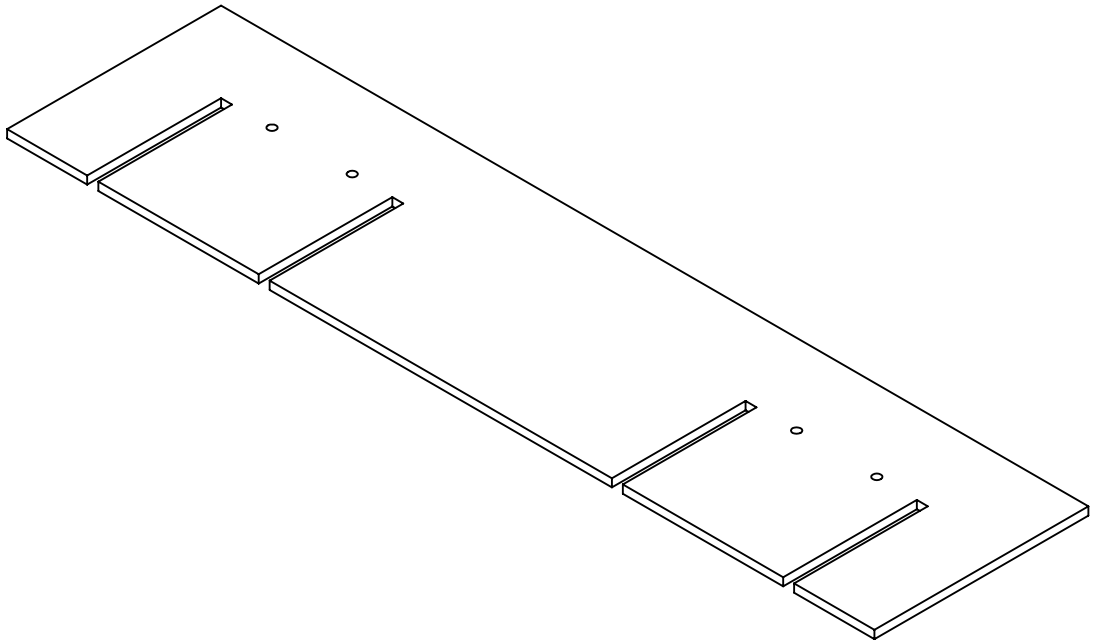

| | | | | | | |
|---|---|---|---|---|---|---|
| UNLESS OTHERWISE SPECIFIED:<br>DIMENSIONS ARE IN MILLIMETERS<br>SURFACE FINISH:<br>TOLERANCES:<br>LINEAR:<br>ANGULAR: | FINISH: | | | DEBUR AND BREAK SHARP EDGES | DO NOT SCALE DRAWING | REVISION |
| | | | | | Jumlah Part : 1 | |
| | NAME | SIGNATURE | DATE | | TITLE: | |
| DRAWN | Septian Ari N | | | | PengLantaiDasar | |
| CHK'D | Dr. Eng. Munadi | | | | | |
| APPV'D | | | | | | |
| MFG | | | | | | |
| Q.A | | | | MATERIAL: ACRYLIC | DWG NO. 8 | A4 |
| | | | | WEIGHT: | SCALE:1:2 | SHEET 1 OF 1 |