5.4 PERHITUNGAN STRUKTUR ASD BERDASARKAN BMS

5.4.1 Sandaran

5.4.1.1 Pembebanan

Menurut BMS 1992 sandaran untuk pejalan kaki harus direncanakan untuk dua pembebanan rencana daya layan yaitu q=0,75 kN/m, yang bekerja secara bersamaan dalam arah menyilang dan vertikal pada sandaran serta tidak ada ketentuan beban ultimit untuk sandaran.

H = 0,70m + 0,20m +0,32m + 0,9 = 2,12 m

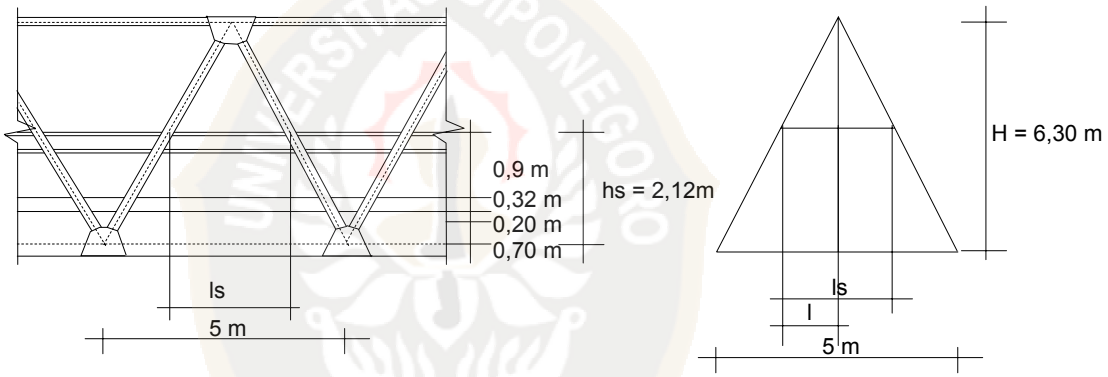

Gambar 5.51 Sandaran Pada Jembatan

Sandaran menumpu pada rangka induk. Untuk perhitungan sandaran diambil sandaran yang bawah karena mempunyai bentang yang panjang yaitu :

Dengan perbandingan segitiga

$$\frac{l}{2{,}5m} = \frac{6{,}30m - 2{,}12m}{6{,}30m} = 1{,}659\,\text{m},\ \text{ls} = 2*1{,}659\text{m} = 3{,}318\ \text{m}$$

- Beban mati = berat sendiri pipa baja,taksir adalah 10 kg/m
- Beban hidup = qH = qV = 0,75 N/mm =75 kg/m

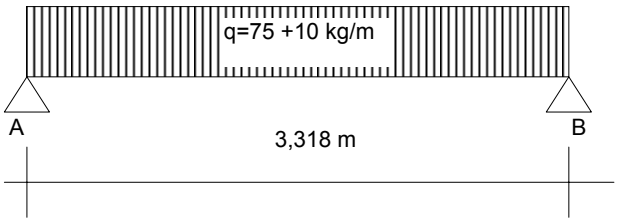

Gambar 5.52 Skema Pembebanan Sandaran

This document is Undip Institutional Repository Collection. The author(s) or copyright owner(s) agree that UNDIP-IR may, without changing the content, translate the submission to any medium or format for the purpose of preservation. The author(s) or copyright owner(s) also agree that UNDIP-IR may keep more than one copy of this submission for purpose of security, back-up and preservation:
(http://eprints.undip.ac.id)

Sandaran direncanakan menggunakan pipa Ø3” t=3,2mm

5.4.1.2 Data-data Teknis

f_y Mpa	σ_{ijin} Mpa	d mm	t mm	A cm^2	W kg/m	Ix=Iy mm^4	ix=iy mm	Wx=Wy mm^3
240	160	76,3	3,2	7,349	5,77	49,2	2,59	12,9

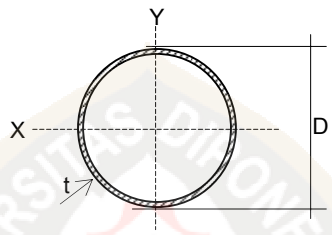

Gambar 5.53 Penampang Pipa Sandaran

5.4.1.3 Analisa Struktur

- $R_A = R_B = \frac{q * l_s}{2} = \frac{85kg/m * 3{,}318m}{2} = 141{,}015$ kg

- $M_{max} = \frac{1}{8} * q * l_s^{\,2} = \frac{1}{8} * 85kg/m * 3{,}318^2 m = 116{,}972$ kgm

5.4.1.4 Cek Kekuatan dan Kekakuan

a. Terhadap momen

$$\sigma = \frac{M_{max}}{W} < \bar{\sigma}$$

$$\sigma = \frac{1169720Nmm}{12900mm^3} = 90{,}67 \text{ MPa} < 160 \text{ Mpa} \quad \text{(ok)}$$

b. Terhadap geser

$$\tau = \frac{D}{A} < \bar{\tau} = 0{,}58 * \bar{\sigma}$$

$$\tau = \frac{1410{,}15N}{734{,}9mm^2} = 1{,}92 \text{ MPa} < 0{,}58*160 = 92{,}8 \text{ MPa} \quad \text{(ok)}$$

c. Terhadap lendutan

This document is Undip Institutional Repository Collection. The author(s) or copyright owner(s) agree that UNDIP-IR may, without changing the content, translate the submission to any medium or format for the purpose of preservation. The author(s) or copyright owner(s) also agree that UNDIP-IR may keep more than one copy of this submission for purpose of security, back-up and preservation:
(http://eprints.undip.ac.id)

$$\Delta = \frac{5 * q * l^4}{384 * E * I} < \Delta = \frac{5 * q * l^4}{384 * E * I}$$

$$\Delta = \frac{5 * 0{,}085 kg / cm * 331{,}8^4 cm}{384 * 2{,}0 * 10^6 kg / cm^2 * 49200 cm^4} = 1{,}36E - 4 \text{ cm} \frac{331{,}8 cm}{360} = 0{,}922$$

cm (ok)

Jadi pipa Ø 3" dapat dipakai untuk sandaran.

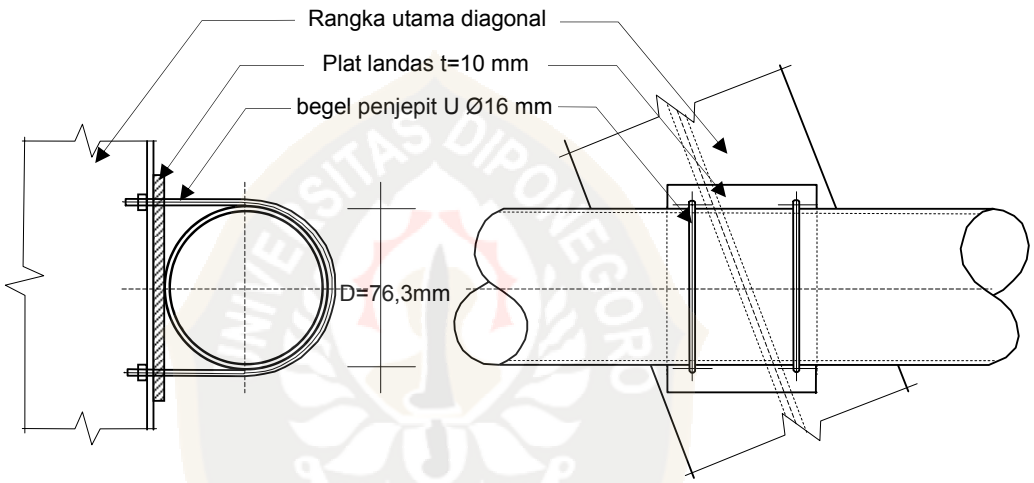

Gambar 5.54 Pemasangan Pipa Sandaran

This document is Undip Institutional Repository Collection. The author(s) or copyright owner(s) agree that UNDIP-IR may, without changing the content, translate the submission to any medium or format for the purpose of preservation. The author(s) or copyright owner(s) also agree that UNDIP-IR may keep more than one copy of this submission for purpose of security, back-up and preservation:
(http://eprints.undip.ac.id)

5.4.2 Lantai Kendaraan dan Trotoar

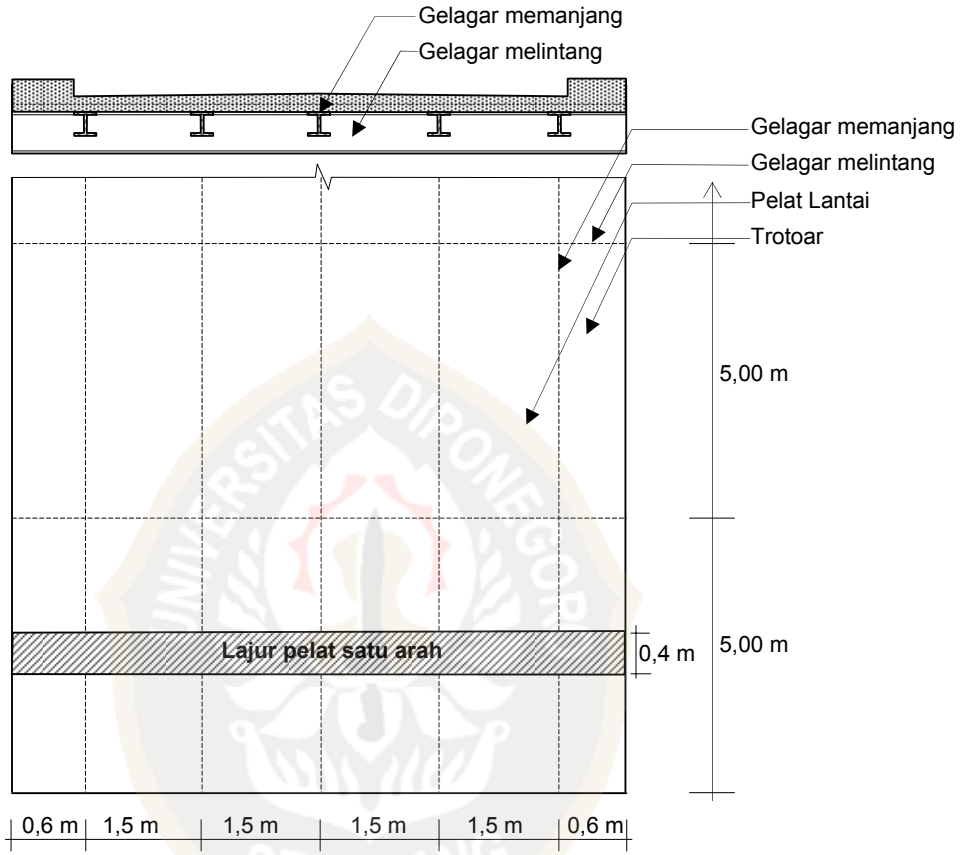

Gambar 5.55 Denah Pelat Lantai dan Gelagar

Karena menggunakan metal deck maka beban diarahkan kesatu arah sehingga termasukdalam sistem pelat satu arah, sehingga bisa diasumsikan sebagai konstruksi yang terletak menerus diatas beberapa tumpuan.

5.4.2.1 Pembebanan

Dengan menempatkan roda di tengah-tengah pelat diharapkan mendapatkan momen yang maksimal, dari pada menempatkan 2 roda pada pelat dengan jarak minimal 1 m.

Untuk tinjauan perhitungan penampang pelat lantai diambil selebar per segmen *metal deck* yaitu selebar 400 mm dan sudah dianggap mewakili.

This document is Undip Institutional Repository Collection. The author(s) or copyright owner(s) agree that UNDIP-IR may, without changing the content, translate the submission to any medium or format for the purpose of preservation. The author(s) or copyright owner(s) also agree that UNDIP-IR may keep more than one copy of this submission for purpose of security, back-up and preservation:
(http://eprints.undip.ac.id)

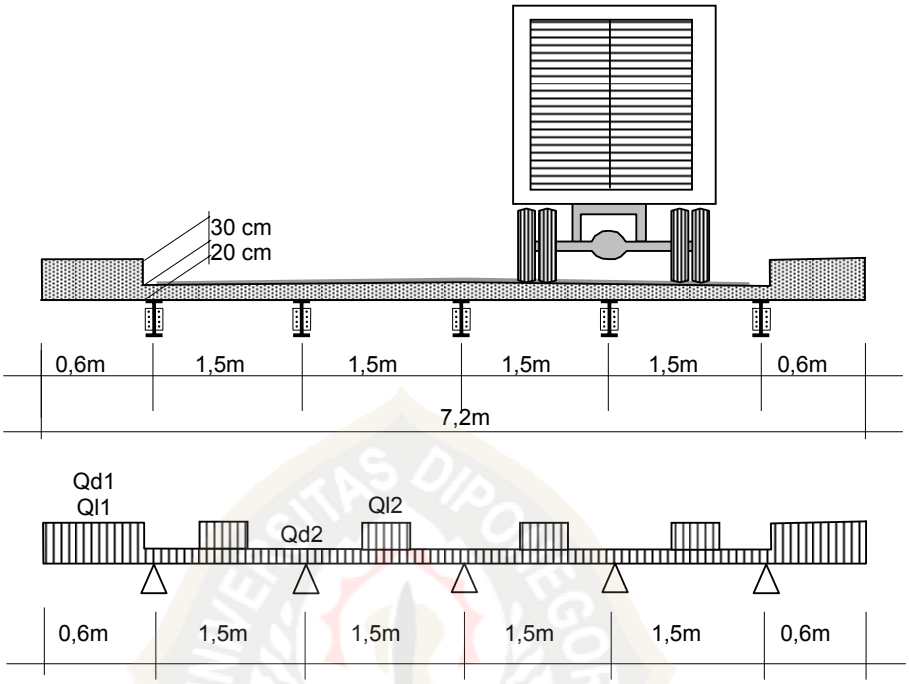

Gambar 5.56 Pembebanan Lantai Jembatan

a. Beban mati lantai

- berat sendiri = 0,2m*0,4m*25kN/m^3 = 2,0
- beban perkerasan = 0,05m*0,4m*22kN/m^3 = 0,44
- beban air hujan = 0,05m*0,4m*9,8kN/m^3 = 0,196

Qd2 = 2,636 kN/m

= 2636 N/m

b. Beban hidup lantai

- beban roda 100 kN = $\dfrac{100kN}{0,2*0,5m^2} = 1000kN/m^2$

= 1000 kN/m^2*0,2m*(1,3) =260 = 260 kN/m

Ql2 = 260000 N/m

c. Beban mati trotoar

- berat sendiri = 0,5m*0,4m*25kN/m^3 = 5,0 = 5,0 kN/m

Qd1 = 5000 N/m

d. Beban hidup trotoar

Luas trotoar $A = b*l$ = 1m*60m = 60 m^2

This document is Undip Institutional Repository Collection. The author(s) or copyright owner(s) agree that UNDIP-IR may, without changing the content, translate the submission to any medium or format for the purpose of preservation. The author(s) or copyright owner(s) also agree that UNDIP-IR may keep more than one copy of this submission for purpose of security, back-up and preservation:
(http://eprints.undip.ac.id)

BMS 92 $10m^2 < A < 100m^2$, maka:

- beban pejalan kaki Ql1 = $5{,}33 - \frac{A}{30} = 5{,}33 - \frac{60}{30} = 3{,}33$ Kpa = 333 kg/m^2

= 333 kg/m^2*60m^2/60m = 333 kg/m

Ql1 = 3330 N/m

5.4.2.2 Analisa Struktur

Dengan menggunakan bantuan program SAP didapat besarnya:

Momen positif max = 84170,76 Nm = 84170760 Nmm

5.4.2.3 Data-data Teknis

MUTU LANTAI DAN TROTOAR		MUTU METAL DECK	
f_c (Mpa)	f_y (Mpa)	f_y (Mpa)	t_{dek} (mm)
30	400	360	4,5

Panjang total *Metal deck* per segmen P = 492,4 mm

Luas $A_s = t_{dek}*P$ = 4,5*492,4 = 2215,8 mm^2

Panjang total *Metal deck* per 1 m lebar P = 1231mm

Berat $W = V*\gamma_{baja}$ = (0,0045*1,231*1,0)*77 kN/m^3 = 0,427 kN/m^2

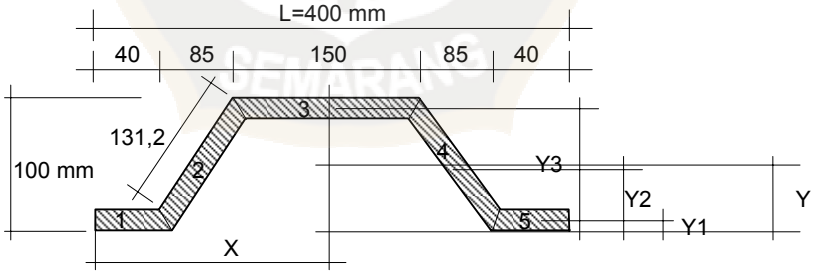

Gambar 5.57 Penampang *Metal deck* Per Segmen

Menentukan titik berat *Metal deck* :

$$Y = \frac{(A1*Y1)+(A2*Y2)+(A3*Y3)+(A4*Y2)+(A5*Y1)}{A1+A2+A3+A4+A5}$$

$$\frac{(4{,}5*40*2{,}25)+(4{,}5*131{,}2*50)+(4{,}5*150*97{,}75)+(4{,}5*131{,}2*50)+(4{,}5*40*2{,}25)}{(4{,}5*40)+(4{,}5*131{,}2)+(4{,}5*150)+(4{,}5*131{,}2)+(4{,}5*40)}$$

$$Y = \frac{125831{,}25}{2215{,}8} = 56{,}8\,\text{mm}$$

X = ½*L = ½*400 = 200 mm

This document is Undip Institutional Repository Collection. The author(s) or copyright owner(s) agree that UNDIP-IR may, without changing the content, translate the submission to any medium or format for the purpose of preservation. The author(s) or copyright owner(s) also agree that UNDIP-IR may keep more than one copy of this submission for purpose of security, back-up and preservation:
(http://eprints.undip.ac.id)

5.4.2.4 Cek Momen Nominal Penampang

d = H-Y = 200-56,8 = 143,2 mm

γ = $0,85-0,007*(fc-28)$ = 0,85-0,007*(30-28) = 0,836 dan 0,65 ≤ γ ≤ 0,85 (ok)

$$K_u = \frac{1}{0,85} * \frac{A_s}{b*d} * \frac{f_y}{f_c} * \frac{1}{\gamma} = \frac{1}{0,85} * \frac{2215,8}{1000*143,2} * \frac{360}{30} * \frac{1}{0,836} = 0,261$$

a = $\gamma*K_u*d$ = 0,836*0,261*143,2 = 31,2 mm

z = $d-a/2$ = 143,2-(31,2/2) = 127,6 mm

$$M_n = f_y*A_s*d*\left(1-0,6*\frac{A_s}{b*d}*\frac{f_y}{f_c}\right)$$

$$M_n = 360*2215,8*143,2\left(1-0,6*\frac{2215,8}{1000*143,2}*\frac{360}{30}\right) = 101502798,7 \text{ Nmm}$$

$M_u \leq Ø*M_n$

84170760 Nmm ≤ 0,9*101502798,7 Nmm

84170760 Nmm ≤ 91352518,82 Nmm

8,417 Tm ≤ 9,135 Tm (ok)

Jadi *Metal deck* bisa digunakan sebagai tulangan positif searah pelat lantai jembatan.

5.4.2.5 Penulangan Pelat Lantai dan Trotoar

Tulangan pada serat atas pelat lantai dan trotoar digunakan tulangan susut, yaitu sebesar:

$A_s = 18\%*b*h$ = 0,18%*1000*200 = 360 mm^2

Dipakai tulangan $Ø_D$ 10-200 = 393 mm^2 (arah x dan y)

This document is Undip Institutional Repository Collection. The author(s) or copyright owner(s) agree that UNDIP-IR may, without changing the content, translate the submission to any medium or format for the purpose of preservation. The author(s) or copyright owner(s) also agree that UNDIP-IR may keep more than one copy of this submission for purpose of security, back-up and preservation:
(http://eprints.undip.ac.id)

5.4.2.6 Gambar Penulangan Pelat dan Trotoar

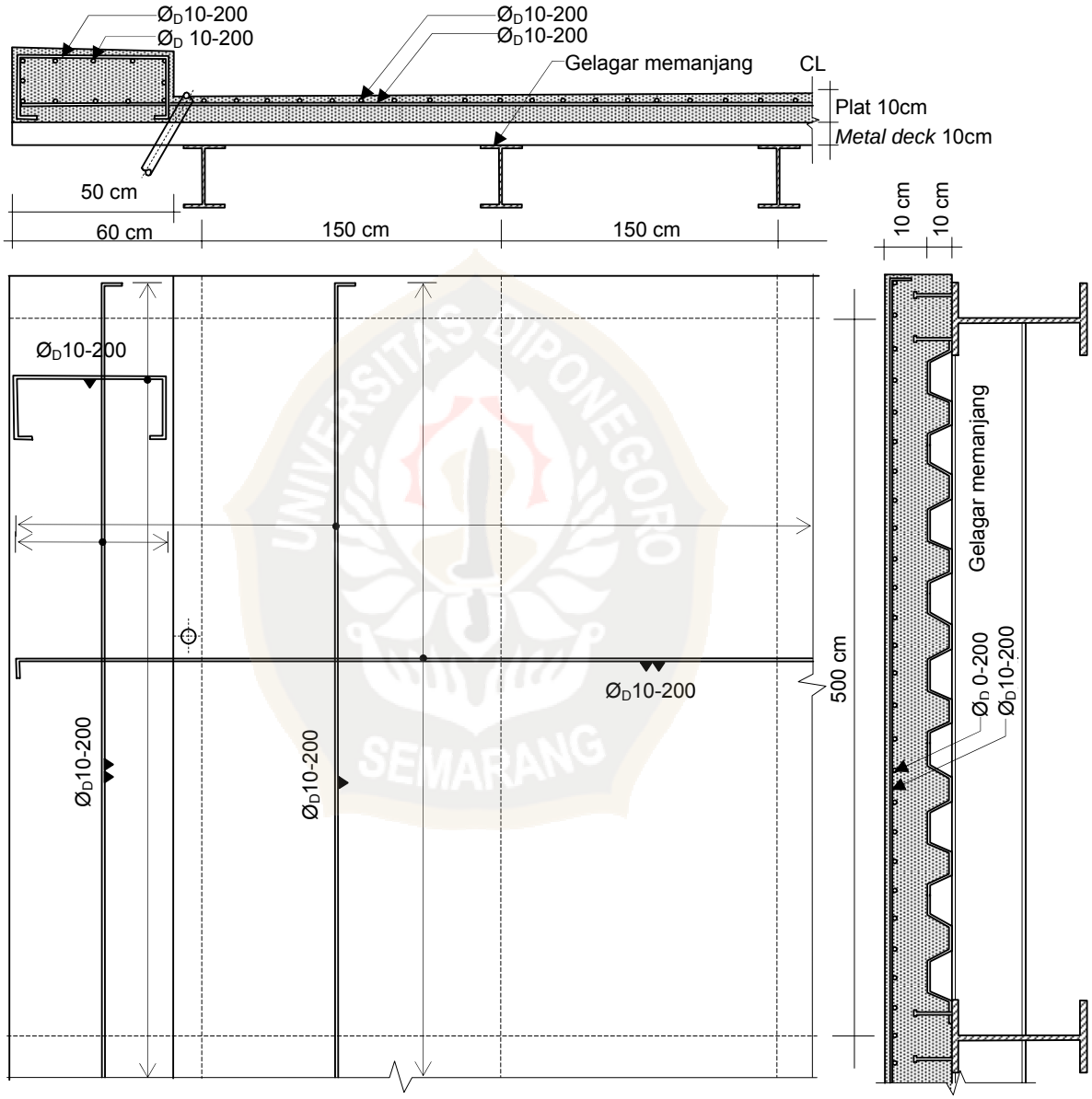

Gambar 5.58 Penulangan Plat Lantai Kendaraan

This document is Undip Institutional Repository Collection. The author(s) or copyright owner(s) agree that UNDIP-IR may, without changing the content, translate the submission to any medium or format for the purpose of preservation. The author(s) or copyright owner(s) also agree that UNDIP-IR may keep more than one copy of this submission for purpose of security, back-up and preservation:
(http://eprints.undip.ac.id)

5.4.3 Gelagar Memanjang

5.4.3.1 Pembebanan

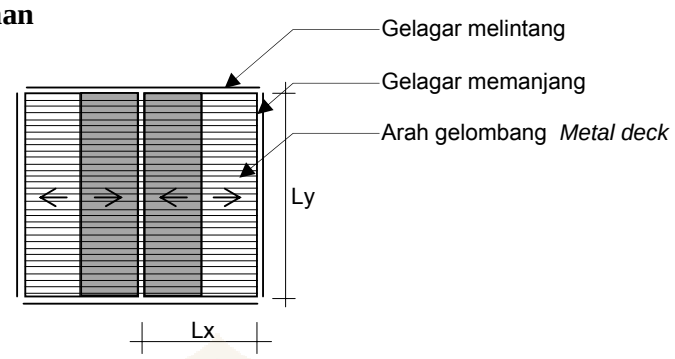

Gambar 5.59 Penyaluran Beban gelagar memanjang

A. Gelagar Memanjang Tengah

a. Beban mati

- Beban lantai = 0,2m*1,5m*25kN/m^3 = 7,5 kN/m
- Beban perkerasan = 0,05m*1,5m*22kN/m^3 = 1,65 kN/m
- Beban air hujan = 0,05m*1,5m*9,8kN/m^3 = 0,735 kN/m
- beban *metal deck* = 0,427kN/m^2*1,5m = 0,64 kN/m

qd = 10,525 kN/m

= 10,525 N/mm

b. Beban hidup

- Beban D

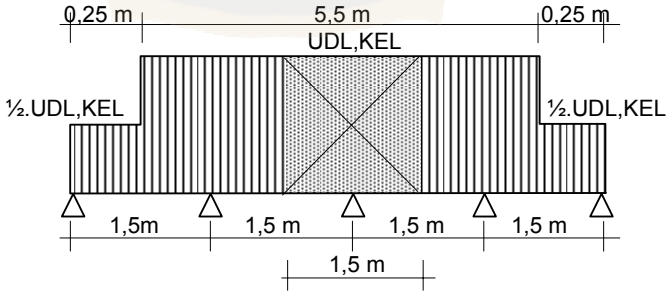

Gambar 5.60 Pengaruh Beban D pada Gelagar Memanjang

Beban UDL

untuk L = 50 m, maka:

$$ql = 8{,}0 * \left[0{,}5 + \frac{15}{L}\right] Kpa = 6{,}4 \text{ Kpa} = 640 \text{ kg/m}^2 = 6{,}4 \text{ kN/m}^2$$

$$ql = 6{,}4\text{kN/m}^2 * 1{,}5\text{m} = 9{,}6 \text{ kN/m} = 9{,}6\text{N/mm}$$

This document is Undip Institutional Repository Collection. The author(s) or copyright owner(s) agree that UNDIP-IR may, without changing the content, translate the submission to any medium or format for the purpose of preservation. The author(s) or copyright owner(s) also agree that UNDIP-IR may keep more than one copy of this submission for purpose of security, back-up and preservation:
(http://eprints.undip.ac.id)

Beban KEL

Beban dinamik (DLA)

Bentang jembatan $20<L_E<90$, maka DLA = 0,525-(0,0025* L_E) = 0,4

p = 44kN/m*1,5 m*(1,05) = 69,3 kN = 69300 N

- Beban T

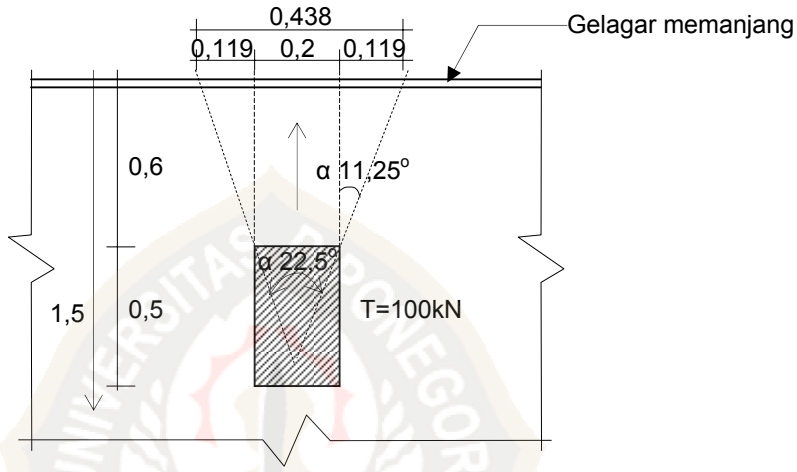

Gambar 5.61 Penyebaran Beban Roda Dalam Lantai Baja

$$qT = \frac{T}{2} * \frac{s}{3,3} * \frac{DLA}{b} = \frac{100}{2} * \frac{1,5}{3,3} * \frac{1,05}{0,438} = 67,45 \qquad = 67,45 \text{ kN/m}$$

$$= 67,45 \text{ N/mm}$$

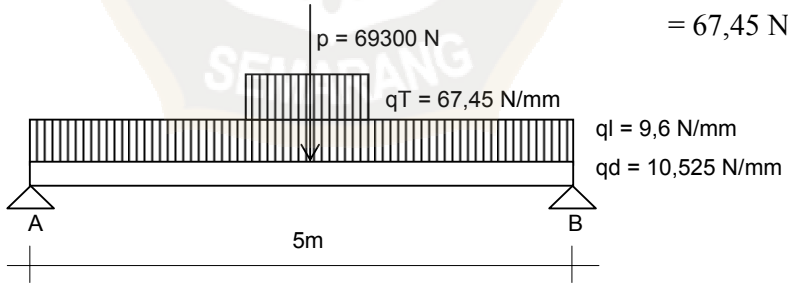

Gambar 5.62 Model Struktur Gelagar Memanjang Tengah

B. Gelagar Memanjang Tepi

a. Beban mati

- Beban lantai = 0,2m*(0,3+0,75)m*25kN/m^3 = 5,25 kN/m
- Beban trotoar = 0,3m*0,3m*22t/m^3 = 1,98 kN/m
- beban *metal deck*= 0,427kN/m^2*(0,3+0,75)m = 0,448 kN/m

qd = 7,678 kN/m

= 7,678 N/mm

This document is Undip Institutional Repository Collection. The author(s) or copyright owner(s) agree that UNDIP-IR may, without changing the content, translate the submission to any medium or format for the purpose of preservation. The author(s) or copyright owner(s) also agree that UNDIP-IR may keep more than one copy of this submission for purpose of security, back-up and preservation:
(http://eprints.undip.ac.id)

b. Beban hidup

- Beban UDL

ql = 3kN/m^2*0,75m = 2,25 kN/m = 2,25 N/mm

Beban KEL

pl = 22kN/m*0,75m*(0,5) = 8,25 kN = 8250 N

- Beban T

$$qT = \frac{T}{2} * \frac{s}{3,3} * \frac{DLA}{b} = \frac{100}{2} * \frac{1,5}{3,3} * \frac{0,4}{0,438} = 67,45 \text{ kN/m} = 67,45 \text{ N/mm}$$

- Beban Hidup Trotoar

pt = 3,33kN/m*0,25m = 0,8325 kN = 83,25 N

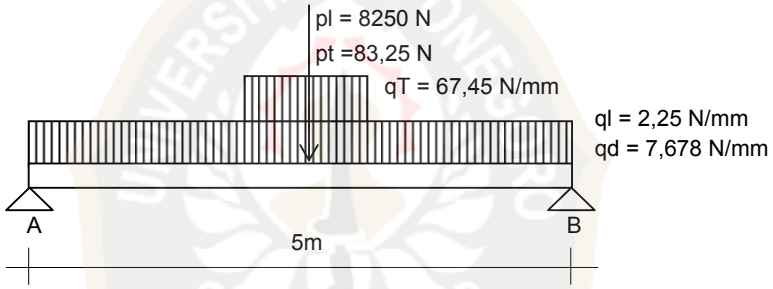

Gambar 5.63 Model Struktur Gelagar Memanjang Tepi

5.4.3.2 Menentukan Profil Gelagar Memanjang

Untuk profil gelagar memanjang tengah dan tepi dibuat sama yaitu dipilih profil IWF 450*200*9*14 dengan data profil sebagai berikut:

f_y Mpa	W_x cm^3	A cm^2	W kg/m	I_x cm^3	H mm	B mm	t_w mm	t_f mm	i_x mm	i_y mm
360	1490	114,2	96,76	33500	450	200	9	14	186	44

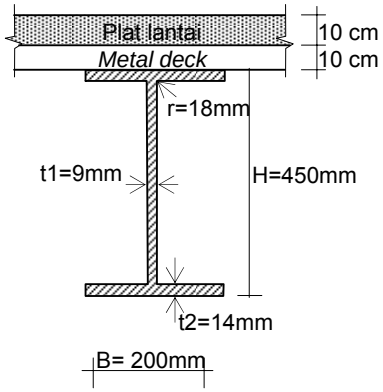

Gambar 5.64 Penampang Profil Gelagar Memanjang

This document is Undip Institutional Repository Collection. The author(s) or copyright owner(s) agree that UNDIP-IR may, without changing the content, translate the submission to any medium or format for the purpose of preservation. The author(s) or copyright owner(s) also agree that UNDIP-IR may keep more than one copy of this submission for purpose of security, back-up and preservation:
(http://eprints.undip.ac.id)

5.4.3.3 Analisa Struktur

Dengan menggunakan bantuan program SAP didapat besarnya:

a. Gelagar Memanjang Tengah

- Momen positif max = 46148036,42 Nmm
- Gaya lintang max = 20403,25 N

b. Gelagar Memanjang Tepi

- Momen positif max = 16844880,33 Nmm
- Gaya lintang max = 9307 N

Dipilih yang terbesar/menentukan yaitu " a"

5.4.3.4 Cek Kekuatan

a. Tegangan lentur

$$\sigma bs = \sigma ts = \frac{M\max}{Wx} = \frac{461480{,}3642 kgcm}{1490 cm^3} = 309{,}718 \text{ kg/cm}^2 < \sigma = 1900 \text{ kg/cm}^2 \text{..ok}$$

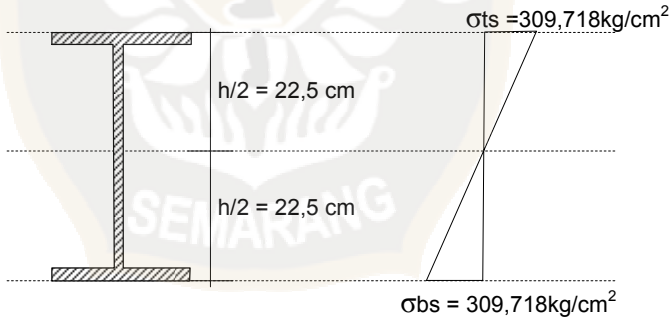

Gambar 5.65 Diagram Tegangan Gelagar Memanjang

b. Tegangan geser

$$\tau = \frac{D}{Aw} = \frac{2040{,}325 kg}{114{,}2 cm2} = 17{,}866 \text{ kg/cm}^2 < 0{,}58*1900 = 1102 \text{kg/cm}^2 \text{.....ok}$$

5.4.3.5 Cek Kekakuan/Lendutan

$$\Delta = \frac{5*qu*l^4}{384*E*I.prof} + \frac{P*l^3}{48*E*I.prof} \text{.....} < \bar{\Delta} = \frac{L}{500} = \frac{500}{500} = 1 \text{ cm}$$

$$\Delta = \frac{5*8{,}7575E-02*500^4}{384*2*10^6*33500} + \frac{69300*500^3}{48*2*10^6*33500} = 0{,}00106 + 0{,}1283 = 0{,}1293 \text{ cm}$$

<1cm.....ok

This document is Undip Institutional Repository Collection. The author(s) or copyright owner(s) agree that UNDIP-IR may, without changing the content, translate the submission to any medium or format for the purpose of preservation. The author(s) or copyright owner(s) also agree that UNDIP-IR may keep more than one copy of this submission for purpose of security, back-up and preservation:
(http://eprints.undip.ac.id)

5.4.4 Gelagar Melintang

5.4.4.1 Gelagar Melintang Tengah

1. Pembebanan

- Beban Reaksi Gelagar Memanjang

Reaksi gelagar memanjang di sini tanpa beban KEL atau pl

P_1 = 2* 38553,25 = 77106,5 N

P_2 = 2*9307,83 = 18615,66 N

- Beban D (KEL)

Menurut BMS 92 beban KEL P=44 KN/m

p = 44kN/m*(1,05) = 46,2 kN/m = 46,2 N/mm

p = 22kN/m*(1,05) = 23,1 kN/m = 23,1 N/mm

2. Menentukan Profil Gelagar Melintang

Pilih profil IWF 700*300*13*24 dengan data profil sebagai berikut:

f_y Mpa	W_x cm^3	A cm^2	W kg/m	I_x Cm^3	H mm	B mm	t_w mm	t_f mm	i_x mm	i_y mm
360	5760	235,5	185	201000	700	300	13	24	293	67,8

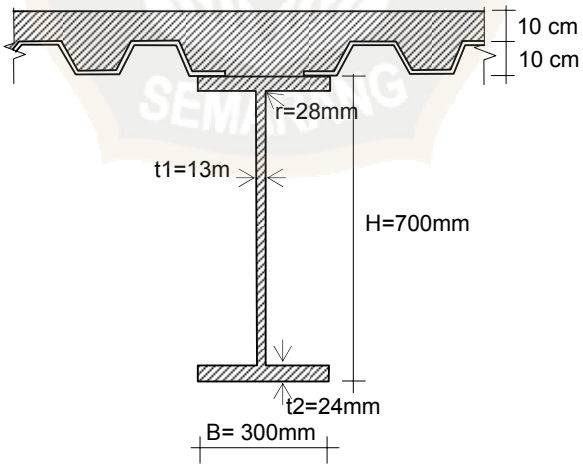

Gambar 5.66 Penampang Profil Gelagar Melintang Tengah

This document is Undip Institutional Repository Collection. The author(s) or copyright owner(s) agree that UNDIP-IR may, without changing the content, translate the submission to any medium or format for the purpose of preservation. The author(s) or copyright owner(s) also agree that UNDIP-IR may keep more than one copy of this submission for purpose of security, back-up and preservation:
(http://eprints.undip.ac.id)

3. Analisa struktur

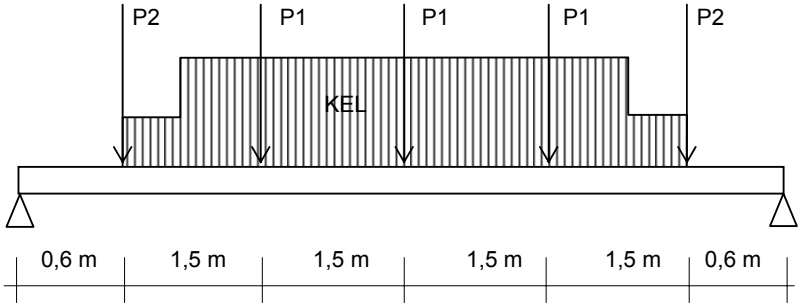

Gambar 5.67 Model Struktur Gelagar Melintang Tengah

Dengan menggunakan bantuan program SAP didapat besarnya:

- Momen positif max = 612196784 Nmm
- Gaya lintang max = 274530,36 N

4. Perhitungan Komposit

a. Untuk aksi komposit sebagian jumlah *shear connector* direncanakan dulu yaitu : digunakan *Stud* (paku) d_s = 16 mm dan H_s = 185 mm

Mutu 8.8 f_u = 830 Mpa

Syarat = $\frac{H_s}{d_s} = \frac{185}{16} = 11{,}6 \geq 4$ (ok)

Luas 1 paku $A_{sc} = \frac{\pi}{4} * d_s^{\,2} = \frac{\pi}{4} * 16^2 = 201$ mm^2

Kekuatan 1 paku

$Q = 0{,}5 * A_{sc} * \sqrt{f_c * E_c} \leq A_{sc} * F_u$ *(N)*

$Q = 0{,}5*201*\sqrt{30*25742{,}9} = 88319{,}4$ N

$Q \leq A_{sc} * F_u = 201*830 = 166830$ N (ok)

Posisi gelombang dek baja sejajar dengan penumpu, maka reduksi kekuatan paku adalah :

$$R_{pa} = 0{,}60 * \left(\frac{w_r}{h_r}\right) * \left(\frac{H_s}{h_r} - 1\right) \leq 1{,}0$$

$$R_{pa} = 0{,}60 * \left(\frac{235}{100}\right) * \left(\frac{185}{100} - 1\right) = 1{,}199 \geq 1 \text{ maka dipakai reduksi 1}$$

This document is Undip Institutional Repository Collection. The author(s) or copyright owner(s) agree that UNDIP-IR may, without changing the content, translate the submission to any medium or format for the purpose of preservation. The author(s) or copyright owner(s) also agree that UNDIP-IR may keep more than one copy of this submission for purpose of security, back-up and preservation:
(http://eprints.undip.ac.id)

Jadi kekuatan1 paku = 1*88319,4 = 88319,4 N

Data perencanaan paku, yaitu:

Jarak Bentang (m)	Gaya Lintang D (N)	Rencana Paku/Baris
0,6	274530,36	2
1,5	187912,82	2
1,5	38553,252	1

$$n_1 = \frac{D_1 - (10\% * D_1)}{Q_n} = \frac{274530{,}36 - (10\% * 274530{,}36)}{88319{,}4} = 4 \text{ buah}$$

Dengan jarak d_1 = 220 mm

n_2 = 4 buah d_2 = 425 mm

n_3 = 2 buah d_3 = 566 mm

Jumlah paku setengah bentang : 10 buah

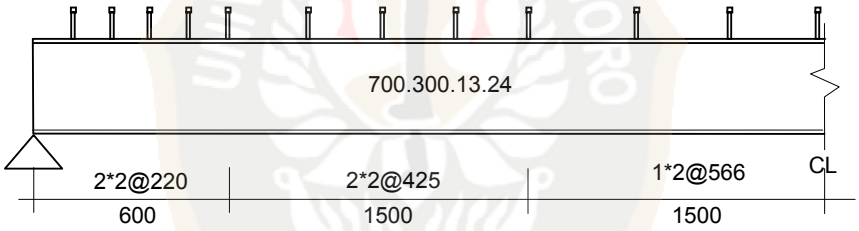

Gambar 5.68 Pemasangan *Stud* Gelagar Memanjang Tengah

b. Cek kekompakan penampang

Untuk penampang komposit hanya ditinjau pada *Web* saja.

Web:

$$\lambda = \left(\frac{b}{t}\right) * \sqrt{\frac{f_y}{250}} = \left(\frac{[700 - 2*24]}{13}\right) * \sqrt{\frac{360}{250}} = 60{,}185 \leq 82$$

Dari hasil di atas profil adalah berpenampang "kompak".

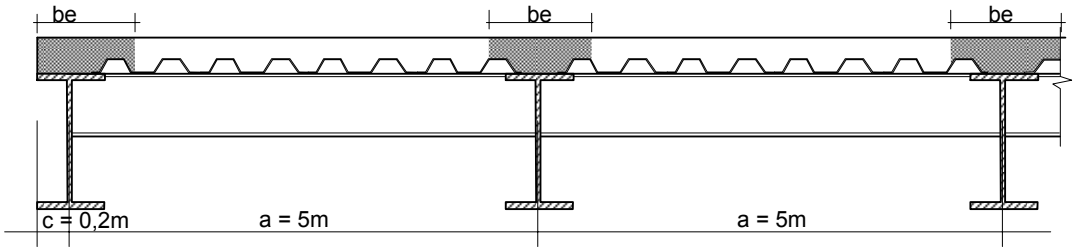

Gambar 5.69 Potongan Memanjang Lantai Jembatan

This document is Undip Institutional Repository Collection. The author(s) or copyright owner(s) agree that UNDIP-IR may, without changing the content, translate the submission to any medium or format for the purpose of preservation. The author(s) or copyright owner(s) also agree that UNDIP-IR may keep more than one copy of this submission for purpose of security, back-up and preservation:
(http://eprints.undip.ac.id)

c. Lebar efektif plat beton

menurut BMS 92 :

Gelagar tengah

- $b_e \leq \frac{l}{5}$ $\quad b_e = \frac{7,2}{5} = 1,44\,m$
- $b_e \leq 12 * t_{min}$ $\quad b_e = 12*0,10m = 1,2$ m
- $b_e \leq a$ $\quad b_e = 5$ m

Dipilih yang terkecil $b_e = 1,2$ m

Tebal beton ekivalen (tbe) dicoba 15 cm, maka:

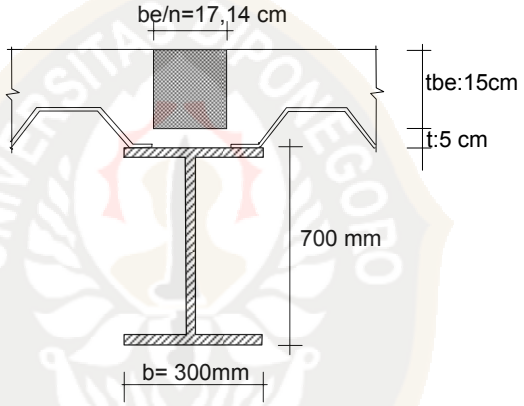

Gambar 5.70 Penampang Luas Beton Ekivalen Gelagar Melintang Tengah

Angka ekivalensi $\quad n = \frac{Ec}{Es} = \frac{2*10^5}{4700*\sqrt{fc}} = \frac{2*10^5\,N/mm^2}{4700*\sqrt{36Mpa}} = 7,09 \approx 7$

Luas beton $\quad Fc = \frac{be}{n} * tbe = \frac{120cm}{7} * 15cm = 211,76\ cm^2$

Luas profil $\quad Fs = 235,5\ cm^2$

Luas total $\quad Ft = 235,5cm^2 + 211,76cm^2 = 467,76\ cm^2$

Ybs $\quad = \frac{h}{2} = \frac{70cm}{2} = 35$ cm

Ybc $\quad = h + \frac{tbe}{2} + t = 70cm + \frac{15cm}{2} + 5cm = 82,5$ cm

$Yb_{komp} \quad = \frac{(Fc*Ybc)+(Fs*Ybs)}{Ft} = \frac{(211,76m^2*82,5cm)+(235,5cm^2*35cm)}{467,76cm^2}$

$= 56,46$ cm

This document is Undip Institutional Repository Collection. The author(s) or copyright owner(s) agree that UNDIP-IR may, without changing the content, translate the submission to any medium or format for the purpose of preservation. The author(s) or copyright owner(s) also agree that UNDIP-IR may keep more than one copy of this submission for purpose of security, back-up and preservation:
(http://eprints.undip.ac.id)

Yt_{komp} = Htot – Yb_{komp} = (70cm + 20cm) – 56,46cm = 33,54 cm

Ys = Yb_{komp} – Ybs = 56,46cm – 35cm = 21,46 cm

Yc = Yt_{komp} - $\frac{t.be}{2}$ = 33,54 cm – 7,5cm = 26,04 cm

I_{komp} = I_{prof} + (Fs*Ys^2) + (Fc*Yc^2) + $\frac{1}{12} * \frac{be}{n} * tbe^3$

=201000+(235,5*$21,46^2$)+(211,76*$26,04^2$)+$\frac{1}{12} * 17,14 * 15^3$

=467077,008 cm^4

5.4.4.1.7 Cek Kekuatan

a. Tegangan Lentur

$$\sigma_c = \frac{M * Yt_{komp}}{I_{komp} * n} = \frac{6121967,84 kgcm * 33,54 cm}{467077,008 cm^4 * 7}$$

$\sigma_c = 62,8\, kg/cm^2 < 0,45*fc = 0,45*360 = 162\ kg/cm^2$.....ok

$$\sigma_{ts} = \frac{\left[\frac{M * Yt_{komp}}{I_{komp}}\right] * \left[Yt_{komp} - td\right]}{Yt_{komp}}$$

$$\sigma_{ts} = \frac{\left[\frac{6121967,84 * 33,54}{467077,008}\right] * \left[33,54 - 5\right]}{33,54} = 374,07\, kg/cm^2$$

$$\sigma_{bs} = \frac{M * Yb_{komp}}{I_{komp}} = \frac{6121967,84 * 56,46}{467077,008} = 740\, kg/cm^2 < \overline{\sigma} = 1900 \text{ ....ok}$$

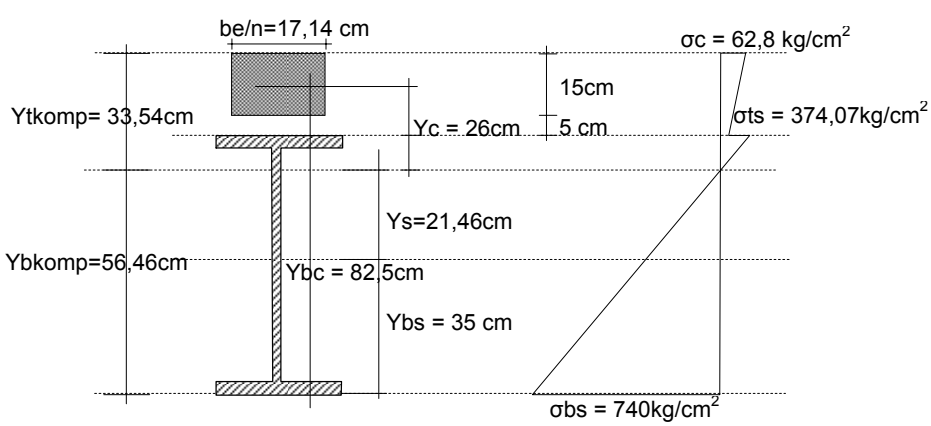

Gambar 5.71 Diagram Tegangan Gelagar Melintang Tengah Komposit

This document is Undip Institutional Repository Collection. The author(s) or copyright owner(s) agree that UNDIP-IR may, without changing the content, translate the submission to any medium or format for the purpose of preservation. The author(s) or copyright owner(s) also agree that UNDIP-IR may keep more than one copy of this submission for purpose of security, back-up and preservation:
(http://eprints.undip.ac.id)

b. Tegangan Geser

$$\tau = \frac{D}{Aw} = \frac{2745{,}3036kg}{1{,}2cm * 70cm} = 32{,}68\,kg/cm^2 < \bar{\tau} = 0{,}58 * 1900 = 1102\,kg/cm^2$$

5.4.4.1.8 Cek Kekakuan

- Beban Mati

$$\Delta = \frac{5 * qu * l^4}{384 * E * Ikomp} + \frac{P * l^3}{48 * E * Ikomp} + \frac{P * a\left(3 * l^2 - 4 * a^2\right)}{48 * E * Ikomp} < \bar{\Delta} = \frac{l}{500}$$

$$\Delta = \frac{5 * 46{,}2 * 720^4}{384 * 2 * 10^6 * 467077{,}008} + \frac{30553{,}25 * 720^3}{48 * 2 * 10^6 * 467077{,}008} + 2 * \left[\frac{23{,}1 * 75}{48 *} \right.$$

$$\left. \frac{*\left(3 * 720^2 - 4 * 60^2\right)}{2 * 10^6 * 467077{,}008}\right] + 2 * \left[\frac{18615{,}66 * 210 * \left(3 * 720^2 - 4 * 210^2\right)}{48 * 2 * 10^6 * 467077{,}008}\right]$$

$$= 0{,}173 + 0{,}254 + 0{,}00012 + 0{,}120 = 0{,}568 \text{ cm} < \bar{\Delta} = \frac{720cm}{500} = 1{,}44cm$$

5.4.4.2 Gelagar Melintang Tepi

1. Pembebanan

- Beban Reaksi Gelagar Memanjang

Reaksi gelagar memanjang di sini tanpa beban KEL atau pl

P_1 = 30553,25 N

P_2 = 9307,83 N

- Beban D (KEL)

Menurut BMS 92 beban KEL P=44 KN/m

p = 44kN/m*(1,05) =46,2 kN/m = 46,2 N/mm

p = 22kN/m*(1,05) = 23,1 kN/m = 23,1N/mm

2. Menentukan Profil Gelagar Memanjang

Pilih profil IWF 588*300*12*20 dengan data profil sebagai berikut:

f_y Mpa	W_x cm^3	A cm^2	W kg/m	Ix cm^3	H mm	B mm	t_w mm	t_f mm	i_x mm	i_y mm
360	4620	192,5	151	118000	588	300	12	20	248	68,5

This document is Undip Institutional Repository Collection. The author(s) or copyright owner(s) agree that UNDIP-IR may, without changing the content, translate the submission to any medium or format for the purpose of preservation. The author(s) or copyright owner(s) also agree that UNDIP-IR may keep more than one copy of this submission for purpose of security, back-up and preservation:
(http://eprints.undip.ac.id)

3. Analisa struktur

Dengan menggunakan bantuan program SAP didapat besarnya:

- Momen positif max = 431593764 Nmm
- Gaya lintang max = 199075 N

4. Perhitungan Komposit

a. Untuk aksi komposit sebagian jumlah *shear connector* direncanakan dulu yaitu : digunakan *Stud* (paku) d_s = 16 mm dan H_s = 185 mm

Mutu 8.8 f_u = 830 Mpa

Kekuatan1 paku = 1*88319,4 = 88319,4 N

Data perencanaan paku, yaitu:

Jarak Bentang (m)	Gaya Lintang D (N)	Rencana Paku/Baris
0,6	199075,29	2
1,5	119614,92	2
1,5	15276,63	1

$$n_1 = \frac{D_1 - (10\% * D_1)}{Q_n} = \frac{199075,29 - (10\% * 199075,29)}{88319,4} = 4 \text{ buah}$$

Dengan jarak d_1 = 275 mm

n_2 = 4 buah d_2 = 566 mm

n_3 = 2 buah d_3 = 566 mm

Jumlah paku setengah bentang : 10 buah

Gambar 5.72 Pemasangan *Stud* Gelagar Memanjang Tepi

This document is Undip Institutional Repository Collection. The author(s) or copyright owner(s) agree that UNDIP-IR may, without changing the content, translate the submission to any medium or format for the purpose of preservation. The author(s) or copyright owner(s) also agree that UNDIP-IR may keep more than one copy of this submission for purpose of security, back-up and preservation:
(http://eprints.undip.ac.id)

b. Cek kekompakan penampang

Untuk penampang komposit hanya ditinjau pada *Web* saja.

Web:

$$\lambda = \left(\frac{b}{t}\right) * \sqrt{\frac{f_y}{250}} = \left(\frac{[588 - 2*20]}{12}\right) * \sqrt{\frac{360}{250}} = 54{,}8 \leq 82$$

Dari hasil di atas profil adalah berpenampang "kompak".

c. Lebar efektif plat beton

menurut BMS 92 :

Gelagar tepi

- $b_e \leq (L/10)+c$ $\quad b_e = (7{,}2/10)+0{,}2 = 0{,}92$ m
- $b_e \leq 6*t_{min}$ $\quad b_e = 6*0{,}10 = 0{,}6$ m
- $b_e \leq (a/2)+c$ $\quad b_e = (5/2)+0{,}2 = 2{,}7$ m

Dipilih yang terkecil $b_e = 0{,}6$ m

Tebal beton ekivalen (tbe) dicoba 15 cm, maka:

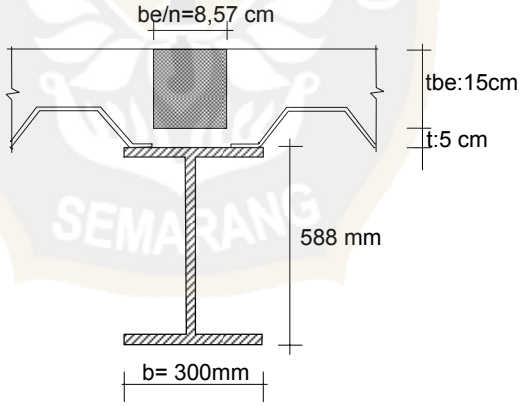

Gambar 5.73 Penampang Luas Beton Ekivalen Gelagar Melintang Tengah

Angka ekivalensi $\quad n = \frac{Ec}{Es} = \frac{2*10^5}{4700*\sqrt{fc}} = \frac{2*10^5\, N/mm^2}{4700*\sqrt{36Mpa}} = 7{,}09 \approx 7$

Luas beton $\quad Fc = \frac{be}{n} * tbe = \frac{60cm}{7} * 15cm = 128{,}57\ \text{cm}^2$

Luas profil $\quad Fs = 192{,}5\ \text{cm}^2$

Luas total $\quad Ft = 192{,}5\text{cm}^2 + 128{,}57\text{cm}^2 = 321{,}07\ \text{cm}^2$

Ybs $\quad = \frac{h}{2} = \frac{58{,}8cm}{2} = 29{,}4$ cm

This document is Undip Institutional Repository Collection. The author(s) or copyright owner(s) agree that UNDIP-IR may, without changing the content, translate the submission to any medium or format for the purpose of preservation. The author(s) or copyright owner(s) also agree that UNDIP-IR may keep more than one copy of this submission for purpose of security, back-up and preservation:
(http://eprints.undip.ac.id)

Ybc $= h + \frac{tbe}{2} + t = 58{,}8cm + \frac{15cm}{2} + 5cm = 71{,}3$ cm

Yb_{komp} $= \frac{(Fc * Ybc) + (Fs * Ybs)}{Ft} = \frac{(128{,}57m^2 * 71{,}3cm) + (192{,}5cm^2 * 29{,}4cm)}{321{,}07cm^2}$

= 46,178 cm

Yt_{komp} = Htot – Yb_{komp} = (58,8cm + 20cm) – 46,178cm = 32,622 cm

Ys = Yb_{komp} – Ybs = 46,178cm – 29,4 cm = 16,778 cm

Yc = Yt_{komp} - $\frac{t.be}{2}$ = 32,622 cm – 7,5cm = 25,122 cm

I_{komp} = I_{prof} + (Fs*Ys^2) + (Fc*Yc^2) + $\frac{1}{12} * \frac{be}{n} * tbe^3$

=118000+(192,5*$16{,}778^2$)+(128,57*$25{,}122^2$)+$\frac{1}{12} * 8{,}57 * 15^3$

=255754,670 cm^4

5.4.4.2.1 Cek Kekuatan

a. Tegangan Lentur

$$\sigma_c = \frac{M * Yt_{komp}}{I_{komp} * n} = \frac{4315937{,}64\text{kgcm} * 32{,}622\text{cm}}{255754{,}67cm^4 * 7}$$

$\sigma_c = 78{,}64\, kg/cm^2 < 0{,}45$*fc = 0,45*360 =162 kg/$cm^2$.....ok

$$\sigma_{ts} = \frac{\left[\frac{M * Yt_{komp}}{I_{komp}}\right] * \left[Yt_{komp} - td\right]}{Yt_{komp}}$$

$$\sigma_{ts} = \frac{\left[\frac{4315937{,}64 * 32{,}622}{255754{,}67}\right] * \left[32{,}622 - 5\right]}{32{,}622} = 466{,}129\, kg/cm^2$$

$$\sigma_{bs} = \frac{M * Yb_{komp}}{I_{komp}} = \frac{4315937{,}64 * 46{,}178}{255754{,}67} = 779{,}26\, kg/cm^2 <$$

$\overline{\sigma} = 1900$ ....ok

This document is Undip Institutional Repository Collection. The author(s) or copyright owner(s) agree that UNDIP-IR may, without changing the content, translate the submission to any medium or format for the purpose of preservation. The author(s) or copyright owner(s) also agree that UNDIP-IR may keep more than one copy of this submission for purpose of security, back-up and preservation:
(http://eprints.undip.ac.id)

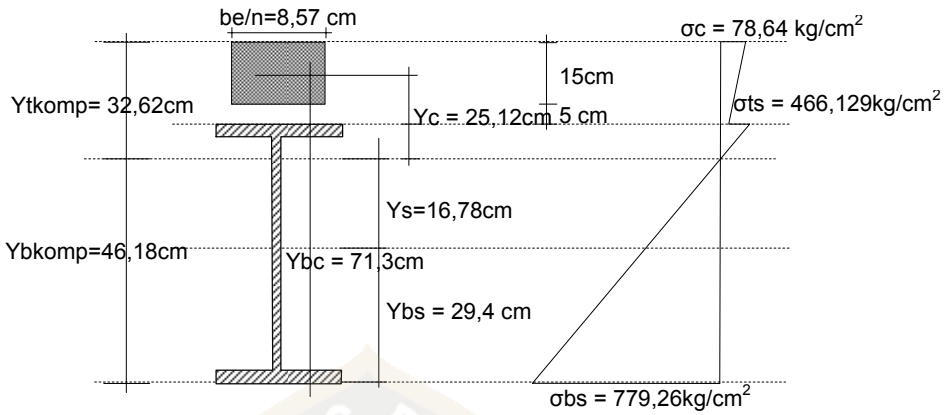

Gambar 5.71 Diagram Tegangan Gelagar Melintang Tengah Komposit

b. Tegangan Geser

$$\tau = \frac{D}{Aw} = \frac{19907{,}529kg}{0{,}6cm * 58{,}8cm} = 564{,}272\,kg/cm^2 < \bar{\tau} = 0{,}58 * 1900 = 1102\,kg/cm^2$$

5.4.4.2.2 Cek Kekakuan

- Beban Mati

$$\Delta = \frac{5 * qu * l^4}{384 * E * Ikomp} + \frac{P * l^3}{48 * E * Ikomp} + \frac{P * a\left(3 * l^2 - 4 * a^2\right)}{48 * E * Ikomp} < \bar{\Delta} = \frac{l}{500}$$

$$\Delta = \frac{5 * 46{,}2 * 720^4}{384 * 2 * 10^6 * 255754{,}67} + \frac{30553{,}25 * 720^3}{48 * 2 * 10^6 * 255754{,}67} + 2 * \left[\frac{23{,}1 * 75}{48 *}\right.$$

$$\left.\frac{*\left(3 * 720^2 - 4 * 60^2\right)}{2 * 10^6 * 255754{,}67}\right] + 2 * \left[\frac{9307{,}83 * 210 * \left(3 * 720^2 - 4 * 210^2\right)}{48 * 2 * 10^6 * 255754{,}67}\right]$$

$$= 0{,}316 + 0{,}464 + 0{,}0002 + 0{,}11 = 0{,}889 \text{ cm} < \bar{\Delta} = \frac{720cm}{500} = 1{,}44cm$$

This document is Undip Institutional Repository Collection. The author(s) or copyright owner(s) agree that UNDIP-IR may, without changing the content, translate the submission to any medium or format for the purpose of preservation. The author(s) or copyright owner(s) also agree that UNDIP-IR may keep more than one copy of this submission for purpose of security, back-up and preservation:
(http://eprints.undip.ac.id)

5.4.4.3 Sambungan Gelagar Memanjang dengan Gelagar Melintang

a. Beban yang bekerja :

- Beban reaksi gelagar memanjang = 30553,25 N
- Beban KEL = 69300 N

P_u = 99853,25 N

b. Material penyambung

- Plat penyambung = 2L 120.120.15 f_{up} = 520 Mpa

f_y Mpa	A cm^2	w mm	b mm	Wx=Wy cm^3	$I_x=I_y$ cm^4	$i_x= i_y$ mm	i_η mm	i_ξ mm
360	33,9	55	120	52,5	446	36,3	23,4	45,6

- Baut mutu 8.8 = d 20 mm f_{uf} = 830 Mpa

A_c = 225 mm^2 A_s = 245 mm^2

c. Syarat jarak baut

- Tengah $2,5*d \leq S \leq 7*d$ 60 – 168 diambil 80 mm
- Tepi $1,5*d \leq S1 \leq 3*d$ 36 – 72 diambil 40 mm

1. Baut Geser

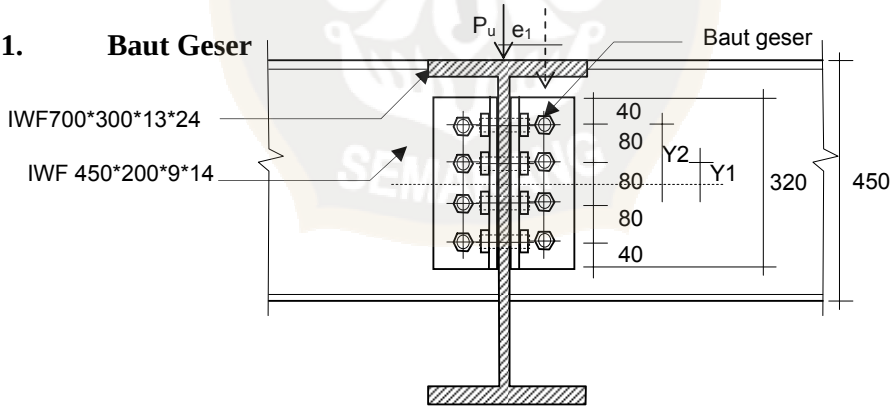

Gambar 5.72 Sambungan Gelagar Memanjang Terhadap Gelagar Melintang dengan Baut Geser

a. Cek pola baut

L_j = 320mm (300 < L_j < 1300) $k_r = 1,075 - L_j/4000$ = 0,995

$N_{geser} = Ø*V_f$ $N_{tumpu} = Ø*V_b$

$= Ø*0,62*f_{uf}*kr*n_c*A_c$ $= Ø*3,2*d_f*t_p*f_{up}$

= 0,7*0,62*400*0,995*2*225 = 0,7*3,2*20*15*520

= 161288,505 N = 349440 N

$N_{tumpu} = Ø*V_b$ $N_{tumpu} = Ø*V_b$

This document is Undip Institutional Repository Collection. The author(s) or copyright owner(s) agree that UNDIP-IR may, without changing the content, translate the submission to any medium or format for the purpose of preservation. The author(s) or copyright owner(s) also agree that UNDIP-IR may keep more than one copy of this submission for purpose of security, back-up and preservation:
(http://eprints.undip.ac.id)

$= Ø*a_e*t_p*f_{up}$ $\qquad$ $= Ø*a_e*t_p*f_{up}$

$= 0,7*40*15*520$ $\qquad$ $= 0,7*80*15*520$

$= 218400$ N $\qquad$ $= 436800$ N

Pilih terkecil N = 161288,505 N

$M \quad = P_u*e_1 = 99853,25*(13/2+55) = 6140974,875$ Nmm

Gaya yang bekerja pada baut:

Akibat gaya geser $K_{VP} = \frac{P_u}{n} = \frac{99853,25}{4} = 24963,3125$ N

Akibat momen $K_{HM} = \frac{M*Y}{2*Y1^2 + 2*Y2^2} = \frac{6140974,875*120}{2*40^2 + 2*120^2} = 23028,655$ N

$K = \sqrt{K_{VP}^{\ 2} + K_{HM}^{\ 2}} = \sqrt{24693,3125^2 + 23028,655^2} = 33765,051 \leq N = 161288,505N$

(ok)

Pola baut geser bisa digunakan!

b. Cek pelat penyambung

a. Kapasitas pelat hubung terhadap kombinasi geser dan momen

Adalah konservatif untuk hanya mempertimbangkan leleh umum dari pelat seperti yang diuraikan dalam BMS 1992 yaitu:

$I_{xy} = 2*446*10^4 = 8920000$ mm^4

$i_{xy} = \sqrt{\frac{8920000}{2*3390}} = 36,272$ mm

$$\lambda_{ny} = \frac{L_e}{i_{xy}} * \sqrt{K_f * \frac{f_y}{250}} = \frac{5148}{26,968} * \sqrt{1 * \frac{360}{250}} = 10,567$$

$\alpha_c = 0,999$

Akibat geser $\tau = \frac{P_u * \alpha_c}{A_p} = \frac{99853,25*0,999}{2*15*320} = 10,39$ Mpa

Akibat momen $\sigma = \frac{M}{W_p} = \frac{6140974,875}{2*1/6*15*320^2} = 11,99$ Mpa

$$\sigma_i = \sqrt{\sigma^2 + 3*\tau^2} \leq Ø*f_y$$

This document is Undip Institutional Repository Collection. The author(s) or copyright owner(s) agree that UNDIP-IR may, without changing the content, translate the submission to any medium or format for the purpose of preservation. The author(s) or copyright owner(s) also agree that UNDIP-IR may keep more than one copy of this submission for purpose of security, back-up and preservation:
(http://eprints.undip.ac.id)

= 21,62 Mpa ≤ 0,7*360 = 252 Mpa (ok)

b. Kekuatan pelat hubung dalam tumpu

Menurut BMS 1992 "*kekuatan pelat dalam tumpu adalah memadai bila melampaui gaya tumpuan rencana akibat baut dalam geser*"

$Ø*V_b$ tumpu = 349440 N

$Ø*V_b$ ujung = 218400 N

$Ø*V_b$ antar lobang = 436800 N

Pilih terkecil N = 218400 N

$V_{bu} \leq Ø*V_{bn}$

$\frac{P_u}{n} \leq 218400$ N

24963,3125 ≤ 218400 N (ok)

Pelat penyambung bisa digunakan!

2. Baut Geser dan Tarik

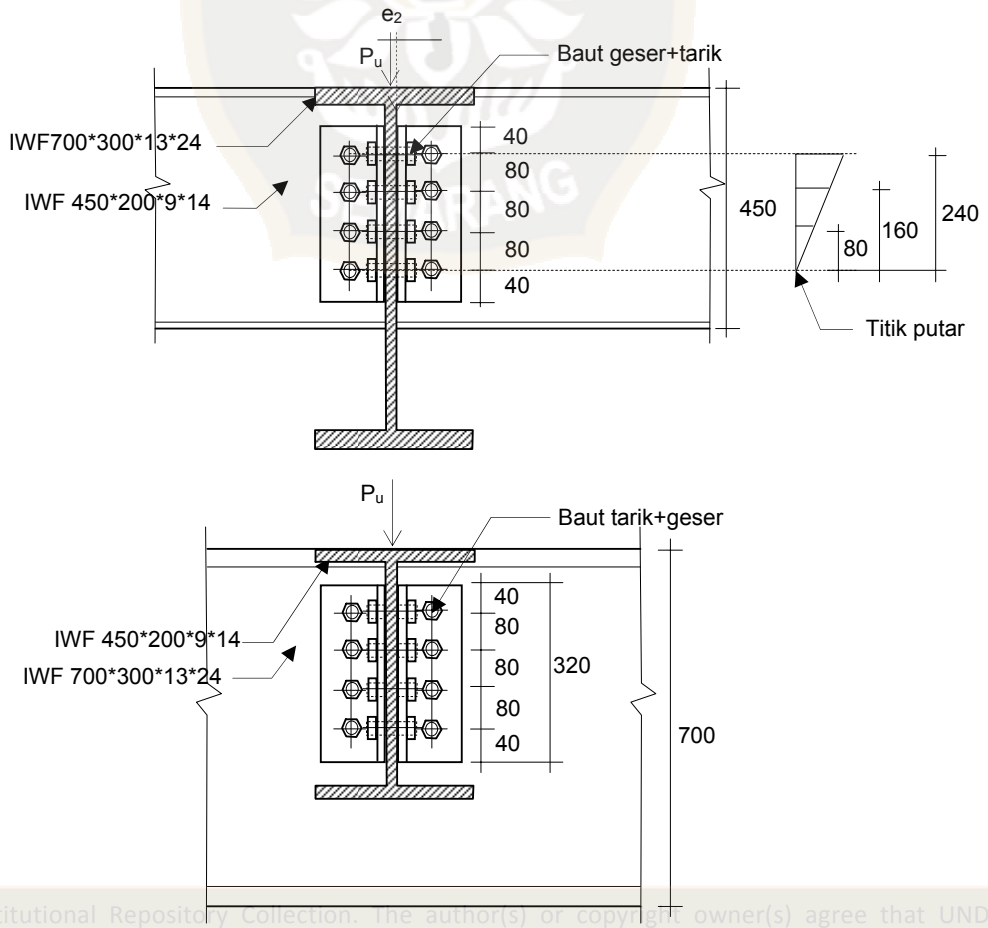

Gambar 5.73 Sambungan Gelagar Memanjang Terhadap Gelagar Melintang Dengan Baut Geser dan Tarik

This document is Undip Institutional Repository Collection. The author(s) or copyright owner(s) agree that UNDIP-IR may, without changing the content, translate the submission to any medium or format for the purpose of preservation. The author(s) or copyright owner(s) also agree that UNDIP-IR may keep more than one copy of this submission for purpose of security, back-up and preservation:
(http://eprints.undip.ac.id)

❖ "Metode pendekatan"

N_{tarik} = $Ø*N_{tf}$ N_{geser} = $Ø*V_f$

= $Ø*A_s*f_{uf}$ = 161288,505 N

= 0,7*245*830 N_{tumpu} = $Ø*V_b$

= 142315 N = 218400 N

= 436800 N

M = P_u*e_2 = 99853,25*(13/2) = 694046,125 Nmm

ΣY^2 = $2*(80^2+160^2+240^2)$ = 179200 mm^2

Akibat gaya geser $K_V = \frac{P_u}{n} = \frac{99853,25}{4} = 24963,3$ N

Akibat momen $K_H = \frac{M*Y}{\Sigma Y^2} = \frac{694046,125*240}{179200} = 929,526$ N

$$\left(\frac{K_V}{\phi*V_f}\right)^2 + \left(\frac{K_H}{\phi*N_{tf}}\right)^2 = \left(\frac{24963,3}{161288,505}\right)^2 + \left(\frac{929,526}{142315}\right)^2 = 0,023 \le 1 \quad \text{(ok)}$$

Pola baut geser dan tarik bisa digunakan!

5.4.5 Pertambatan/Ikatan Angin

5.4.5.1 Pembebanan

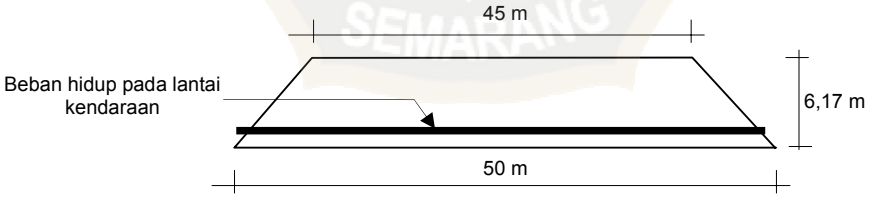

Gambar 5.74. Bidang Sisi Rangka Utama dan Beban Hidup

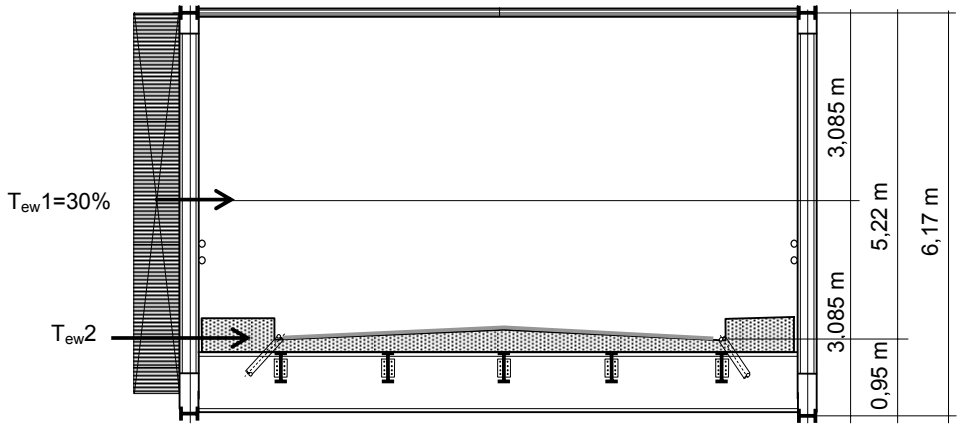

Gambar 5.75. Pengaruh Angin dan Beban hidup Terhadap Rangka Utama

This document is Undip Institutional Repository Collection. The author(s) or copyright owner(s) agree that UNDIP-IR may, without changing the content, translate the submission to any medium or format for the purpose of preservation. The author(s) or copyright owner(s) also agree that UNDIP-IR may keep more than one copy of this submission for purpose of security, back-up and preservation:
(http://eprints.undip.ac.id)

Luas bidang rangka A_b = (50m+45m)*0,5*6,17m = 293,075 m^2

Beban angin yang timbul:

a. Rangka induk

Menurut BMS 92 *"luas ekivalen diambil sebagai luas padat jembatan dalam elevasi proyek tegak lurus, untuk jembatan rangka diambil sebesar 30% luas yang dibatasi oleh unsur rangka terluar".*

$T_{ew}1 = 30\%*[0,0006*C_w*(V_w)^2*A_b]*(1,2)$

$= 30\%*0,0006*1,2*30^2*293,075*(1,2)$

= 68,368 kN

b. Beban hidup

Menurut BS 92 *"apabila ada kendaraan di atas jembatan,maka beban garis merata tambahan arah horizontal harus diterapkan pada permukaan lantai jembatan".*

$T_{ew}2 = [0,0012*C_w*(V_w)^2]*L*(1,2)$

$= 0,0012*1,2*30^2*50*(1,2)$

= 77,76 kN

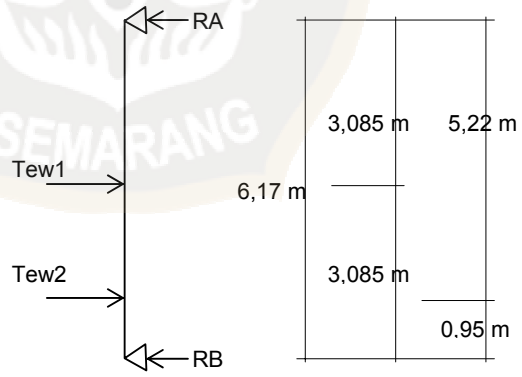

1. Tekanan angin atas

$$R_A = \frac{(T_{ew}1*3,085)+(t_{ew}2*0,95)}{6,15} = \frac{(68,368*3,085)+(77,76*0,95)}{6,15} = 46,307 \text{ kN}$$

$$P_1 = \frac{R_A}{9} = \frac{46,307}{9} = 5,145 \text{ kN}$$

$$P_2 = \frac{P}{2} = \frac{5,145}{2} = 2,572 \text{ kN}$$

This document is Undip Institutional Repository Collection. The author(s) or copyright owner(s) agree that UNDIP-IR may, without changing the content, translate the submission to any medium or format for the purpose of preservation. The author(s) or copyright owner(s) also agree that UNDIP-IR may keep more than one copy of this submission for purpose of security, back-up and preservation:
(http://eprints.undip.ac.id)

2. Tekanan angin bawah

$$R_B = \frac{(T_{ew}1*3{,}085)+(t_{ew}2*5{,}22)}{6{,}15} = \frac{(68{,}368*3{,}085)+(77{,}76*5{,}22)}{6{,}15} = 100{,}296$$

$$P_1 = \frac{R_B}{10} = \frac{100{,}296}{10} = 10{,}029 \text{ kN}$$

$$P_2 = \frac{P}{2} = \frac{10{,}029}{2} = 5{,}014 \text{ kN}$$

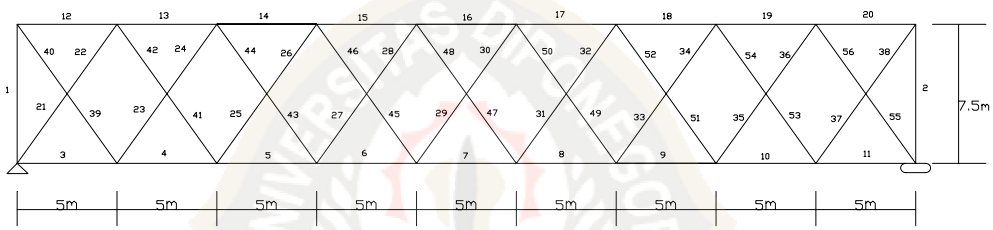

5.4.5.2 Pendimensian Ikatan Angin Atas

1. Batang Vertikal (1-2)

L= 7,2 m, P = -43,448 kN (tekan)

Dicoba profil IWF 200*200*8*12, dengan data profil :

f_y Mpa	A cm^2	W kg/m	H mm	B mm	t_w mm	t_f mm	i_x mm	i_y mm
250	63,53	49,9	200	200	8	12	86,2	50,2

Koefisien tekuk (sendi-sendi) K=1

$L_e = K_e*L$ = 1*7200 = 7200 mm

a. Tentukan kapasitas penampang (N_n)

Kelangsingan penampang

$$\lambda_{e-flens} = \left(\frac{200-8}{2*12}\right)*\sqrt{\frac{250}{250}} = 8 \le \lambda_{ey} = 16$$

$$\lambda_{e-web} = \left(\frac{200-(2*12)}{8}\right)*\sqrt{\frac{250}{250}} = 22 \le \lambda_{ey} = 45$$

This document is Undip Institutional Repository Collection. The author(s) or copyright owner(s) agree that UNDIP-IR may, without changing the content, translate the submission to any medium or format for the purpose of preservation. The author(s) or copyright owner(s) also agree that UNDIP-IR may keep more than one copy of this submission for purpose of security, back-up and preservation:
(http://eprints.undip.ac.id)

Karena semua elemen pelat adalah kurang dari batas kelangsingan, lebar efektif dari tiap elemen pelat adalah lebar aktual (K_f = 1)

Jadi N_n $= K_f * A_n * f_y$

= 1*6353*250

= 1588250 N

b. Tentukan kapasitas tekan unsur (N_c)

Kelangsingan unsur

$$\lambda = \frac{L_e}{i_{\min}} = \frac{7200}{50,2} = 143,43 \leq 200 \text{ (batas kelangsingan batang tekan)}$$

$$\lambda_{ny} = \frac{L_e}{i_{\min}} * \sqrt{K_f * \frac{f_y}{250}} = \frac{7200}{50,2} * \sqrt{1 * \frac{250}{250}} = 143,4$$

α_c = 0,212 (interpolasi)

$N_c = \alpha_c * N_n$

N_c = 0,212*1588,25 kN

N_c = 336,709 kN

$N_u \leq Ø * N_c$

43,448 kN $\leq$ 0,9*336,709 kN

4,3448 T $\leq$ 30,304 T (ok)

2. Batang Diagonal (21-22,55-56)

L= 4,383 m, P = -56,021 kN (tekan)

Dicoba profil IWF 169*125*5,5*8, dengan data profil:

f_y Mpa	A cm^2	W kg/m	H mm	B mm	t_w mm	t_f mm	i_x mm	i_y mm	I_y cm^4
250	29,65	23,3	169	125	5,5	8	71,8	29,7	1530

Koefisien tekuk (sendi-sendi) didapat K=1

$L_e = K_e * L$ = 1*4383 = 4383 mm

a. Tentukan kapasitas penampang (N_n)

Kelangsingan penampang

$$\lambda_{e-flens} = \left(\frac{125-5,5}{2*8}\right) * \sqrt{\frac{360}{250}} = 8,9 \leq \lambda_{ey} = 16$$

This document is Undip Institutional Repository Collection. The author(s) or copyright owner(s) agree that UNDIP-IR may, without changing the content, translate the submission to any medium or format for the purpose of preservation. The author(s) or copyright owner(s) also agree that UNDIP-IR may keep more than one copy of this submission for purpose of security, back-up and preservation:
(http://eprints.undip.ac.id)

$$\lambda_{e-web} = \left(\frac{169-(2*8)}{5,5}\right)*\sqrt{\frac{360}{250}} = 33,4 \le \lambda_{ey} = 45$$

Karena semua elemen pelat adalah kurang dari batas kelangsingan, lebar efektif dari tiap elemen pelat adalah lebar aktual (K_f = 1)

Jadi N_n = $K_f*A_n*f_y$

= 1*2965*250

= 741200 N

b. Tentukan kapasitas tekan unsur (N_c)

Kelangsingan unsur

$$\lambda = \frac{L_e}{i_{\min}} = \frac{4383}{29,7} = 147,57 \le 200 \text{ (batas kelangsingan batang tekan)}$$

$$\lambda_{ny} = \frac{L_e}{i_{\min}} * \sqrt{K_f * \frac{f_y}{250}} = \frac{4383}{29,7} * \sqrt{1 * \frac{250}{250}} = 147,57$$

α_c = 0,229 (interpolasi)

N_c = 0,229*741,2 = 169,735 kN

$N_u \le Ø*N_c$

56,021 kN ≤ 0,9*169,735 kN

5,6021 T ≤ 15,276 T (ok)

3. Batang Diagonal (37-56)

L= 4,383 m, P = 39,893 kN (tarik)

Dipakai IWF 169*125*5,5*8

a. Menentukan kuat tarik rencana

- Leleh unsur

$N_t = A_g*f_y$ = 2965*250 = 741200 N

- Patahan unsur

$N_t = 0,85*K_t*A_n*f_u$ = 0,85*0,85*75%*2965*410 = 658730,344 N

Ambil terkecil N_t = 658730,344 N

$N_u \le Ø*N_t$

39893 N ≤ 0,9*658730,344 N

3,8893 T ≤ 59,286 T (ok)

This document is Undip Institutional Repository Collection. The author(s) or copyright owner(s) agree that UNDIP-IR may, without changing the content, translate the submission to any medium or format for the purpose of preservation. The author(s) or copyright owner(s) also agree that UNDIP-IR may keep more than one copy of this submission for purpose of security, back-up and preservation:
(http://eprints.undip.ac.id)

b. Kelangsingan unsur

$$\lambda = \frac{L}{i_{\min}} = \frac{4383}{29,7} = 147,57 \leq 300 \text{ (konstruksi sekunder) ok}$$

5.4.5.3 Sambungan

Untuk profil I sambungan harus pada kedua sayapnya (jumlah minimal baut adalah 4 buah/2 per sayap).

a. Material penyambung

- Plat penyambung = t_p 10 mm f_{up} = 410 Mpa
- Baut mutu 4.6 = d 16 mm f_{uf} = 400 Mpa

A_c = 144 mm^2 A_s = 157 mm^2

b. Syarat jarak baut

- Tengah $2,5*d \leq S \leq 7*d$ 40 – 112 diambil 70 mm
- Tepi $1,5*d \leq S1 \leq 3*d$ 24 – 48 diambil 35 mm

1. Batang diagonal dengan plat buhul ikatan angin

A. Batang tarik

Besar gaya batang P_u = 39,893 kN

- Kekuatan nominal penyambung

$N_{geser} = V_f$

$= 0,62*f_{uf}*kr*n_c*A_c$

= 0,62*400*1*1*144

= 35712 N

$N_{tumpu} = V_b$

$= a_e*t_p*f_{up}$

= 35*10*410

= 143500 N

$N_{tumpu} = V_b$

$= 3,2*d_f*t_p*f_{up}$

= 3,2*16*10*410

= 209920 N

Pilih terkecil N = 35712 N

- Jumlah baut

$$n = \frac{P_u}{\phi * N} = \frac{39893}{0,9*35712} = 1,24 \sim 4 \text{ buah (min)}$$

This document is Undip Institutional Repository Collection. The author(s) or copyright owner(s) agree that UNDIP-IR may, without changing the content, translate the submission to any medium or format for the purpose of preservation. The author(s) or copyright owner(s) also agree that UNDIP-IR may keep more than one copy of this submission for purpose of security, back-up and preservation:
(http://eprints.undip.ac.id)

- Cek kekuatan tarik profil

A_g = 2965 mm^2

A_n = A_g – $(n*d_l*t_f)$ = 2965-(4*18*8) = 2389 mm^2

Leleh unsur $N_t = A_g * f_y$ = 2965*250 = 741250 N

Patahan unsur $N_t = 0,85*K_t*A_n*f_{up}$ = 0,85*0,85*2389*410 = 707681,5 N

Pilih terkecil N_t = 707681,5 N

$P_u \leq Ø*N_t$

39893 N ≤ 0,9*707681,5 N

3,9893 T ≤ 63,691 T (ok)

B. Batang tekan

Besar gaya batang: P_u = 24,119 kN

- Kekuatan nominal penyambung

N_{geser} = V_f
= $0,62*f_{uf}*kr*n_c*A_c$
= 0,62*400*1*1*144
= 35712 N

N_{tumpu} = V_b
= $3,2*d_f*t_p*f_{up}$
= 3,2*16*10*410
= 209920 N

Pilih terkecil N = 35712 N

- Jumlah baut

$$n = \frac{P_u}{\phi * N} = \frac{24119}{0,9*35712} = 0,75 \sim 4 \text{ buah (min)}$$

- Cek kekuatan

$P_u \leq Ø*N$

24119 N ≤ 0,9*35712 N

2,4119 T ≤ 2,49 T (ok)

2. Plat buhul ikatan angin dengan rangka utama

P_u = 2*39,893*sin 55,2^0 = 32,76 kN (tarik)

- Kekuatan nominal penyambung

N_{tarik} = N_{tf}
= A_s*f_{uf}
= 157*400

N_{geser} = V_f
= 35712 N

This document is Undip Institutional Repository Collection. The author(s) or copyright owner(s) agree that UNDIP-IR may, without changing the content, translate the submission to any medium or format for the purpose of preservation. The author(s) or copyright owner(s) also agree that UNDIP-IR may keep more than one copy of this submission for purpose of security, back-up and preservation:
(http://eprints.undip.ac.id)

= 62800 N

N_{tumpu} = V_b

= 209920 N

= 143500 N

Pilih yang terkecil N_t = 35712 N

- Jumlah baut

$n = \frac{P_u}{\phi * N} = \frac{32766}{0,9 * 35712} = 1,019$ atau pembautan mengikuti pola dari sambungan rangka utama!

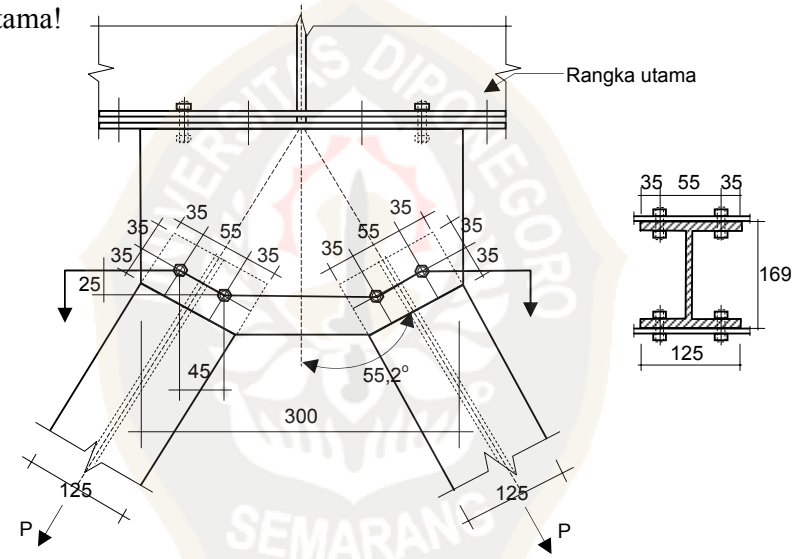

Gambar 5.76 Hubungan Batang Diagonal dengan Buhul

- Cek kekuatan tarik pelat

A_g = 2*10*300 = 6000 mm^2

A_n = 6000-[(2*18*10*2)+($2 * \frac{2 * 25^2 * 10}{4 * 45}$)] = 5141,111 mm^2

Pilih terkecil A_n = 5141,111 mm^2

Leleh unsur $N_t = A_g * f_y$ = 6000*250 = 1500000 N

Patahan unsur $N_t = 0,85 * K_t * A_n * f_{up}$ = 0,85*0,85*5141,111*410=1522925,606 N

Pilih terkecil N_t = 1500000 N

$P_u \leq Ø * N_t$

32,766 kN ≤ 0,9*1500 kN

21,383 kN ≤ 1350 kN (ok)

This document is Undip Institutional Repository Collection. The author(s) or copyright owner(s) agree that UNDIP-IR may, without changing the content, translate the submission to any medium or format for the purpose of preservation. The author(s) or copyright owner(s) also agree that UNDIP-IR may keep more than one copy of this submission for purpose of security, back-up and preservation:
(http://eprints.undip.ac.id)

3. Batang vertikal dengan rangka utama

Gaya tekan tidak pengaruh, sehingga yang diperhitungkan adalah beban reaksi batang. Reaksi berat profil : R = (0,499*7,2*0,6)/2 = 2,15 kN

- Kekuatan nominal penyambung

$N_{geser} = V_f$

= 35712 N

$N_{tumpu} = V_b$

$= a_e * t_p * f_{up}$

= 50*10*410

= 205000 N

$N_{tumpu} = V_b$

$= 3{,}2 * d_f * t_p * f_{up}$

= 3,2*16*10*410

= 209920 N

Pilih yang terkecil N = 35712 N

- Cek kekuatan

$R \leq Ø * N$

2155 N $\leq$ 0,9*35712 N

0,215 T $\leq$ 2,49 T (ok)

- Jumlah baut

$$n = \frac{R}{\phi * N} = \frac{2155}{0{,}9 * 35712} = 0{,}067 \sim 4 \text{ buah}$$

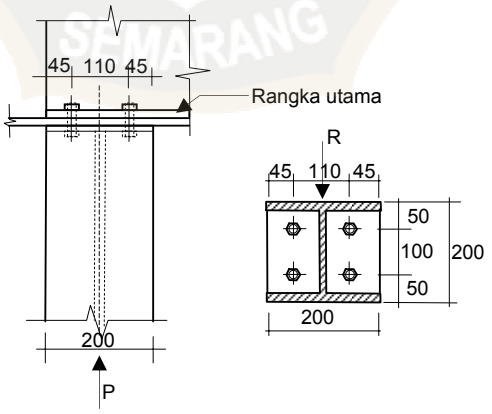

Gambar 5.77 Hubungan Batang Vertikal dengan Rangka Utama

This document is Undip Institutional Repository Collection. The author(s) or copyright owner(s) agree that UNDIP-IR may, without changing the content, translate the submission to any medium or format for the purpose of preservation. The author(s) or copyright owner(s) also agree that UNDIP-IR may keep more than one copy of this submission for purpose of security, back-up and preservation:
(http://eprints.undip.ac.id)

5.4.5.4 Pendimensian Ikatan Angin Bawah

1. Batang Tekan

L= 8,766/2 = 4,383 m, P = -55,992 kN (tekan)

Dicoba profil 2L 90*90*11, dengan data profil L:

f_y Mpa	A cm^2	W kg/m	b mm	d mm	$I_x=I_y$ cm^4	$i_x= i_y$ mm	i_η mm	i_ξ mm
250	18,7	14,7	90	11	138	27,2	17,5	34,1

Koefisien tekuk (sendi-sendi) K=1

$L_e = K_e*L$ = 1*4383 = 4383 mm

a. Tentukan kapasitas penampang (N_n)

Kelangsingan penampang

$$\lambda_e = \left(\frac{90-11}{11}\right)*\sqrt{\frac{250}{250}} = 7{,}18 \le \lambda_{ey} = 16$$

Karena elemen pelat adalah kurang dari batas kelangsingan, lebar efektif dari tiap elemen pelat adalah lebar aktual (K_f = 1)

Jadi $N_n = K_f*A_n*f_y$

= 1*2*1870*250

= 935000 N

b. Tentukan kapasitas tekan unsur (N_c)

Kelangsingan unsur

$I_{xy} = 2*138*10^4 = 2720000\ mm^4$

$$i_{xy} = \sqrt{\frac{2720000}{2*1870}} = 26{,}968\ \text{mm}$$

$$\lambda_{xy} = \frac{L_e}{i_{xy}} = \frac{4383}{26{,}968} = 162{,}52 \le 200 \text{ (batas kelangsingan batang tekan)}$$

$$\lambda_{ny} = \frac{L_e}{i_{xy}}*\sqrt{K_f*\frac{f_y}{250}} = \frac{4383}{26{,}968}*\sqrt{1*\frac{250}{250}} = 162{,}52$$

α_c = 0,192 (interpolasi)

$N_c = \alpha_c * N_n$ = 0,192*935 = 179,52 kN

$N_u \le Ø*N_c$

55,992 kN $\le$ 0,9*179,52 kN

This document is Undip Institutional Repository Collection. The author(s) or copyright owner(s) agree that UNDIP-IR may, without changing the content, translate the submission to any medium or format for the purpose of preservation. The author(s) or copyright owner(s) also agree that UNDIP-IR may keep more than one copy of this submission for purpose of security, back-up and preservation:
(http://eprints.undip.ac.id)

55,992 kN $\leq$ 161,568 kN (ok)

2. Batang Tarik

P = 47,844 kN (tarik)

Dipakai profil L 90*90*11

a. Menentukan kuat tarik rencana

- Leleh unsur

$N_t = A_g * f_y$ = 1780*250 = 445000 N

- Patahan unsur

$N_t = 0{,}85 * K_t * A_n * f_u$ = 0,85*0,85*85%*1780*410 = 470849,638 N

Ambil terkecil N_t = 445000 N

$N_u \leq Ø * N_t$

47,844 kN $\leq$ 0,9*445 kN

47,844 kN $\leq$ 400,5 kN (ok)

b. Kelangsingan unsur

$$\lambda = \frac{L}{i_{\min}} = \frac{4383}{17{,}5} = 250 \leq 300 \text{ (konstruksi skunder) ok}$$

3. Kopel

Batang tekan dihubungkan pelat kopel yang direncanakan berjumlah 5 buah sehingga:

$$L_1 = \frac{L_e}{n} = \frac{4383}{5+1} = 730{,}5 \text{ mm}$$

$$\left(\frac{L_1}{i}\right)_c = \frac{L_1}{i_{\min}} = \frac{730{,}5}{17{,}5} = 41{,}74 \leq 50 \text{ (ok)}$$

$$\left(\frac{L_e}{i}\right)_{bn} = \sqrt{\left(\frac{L_e}{i}\right)_m^2 + \left(\frac{L_1}{i}\right)_c^2} = \sqrt{162{,}3^2 + 41{,}74^2} = 167{,}758$$

α_c = 0,181 (interpolasi)

$N_c = \alpha_c * N_n$ = 0,181*935 kN = 169,235 kN

$N_u \leq Ø * N_c$

55,992 kN $\leq$ 0,9*169,235 kN

This document is Undip Institutional Repository Collection. The author(s) or copyright owner(s) agree that UNDIP-IR may, without changing the content, translate the submission to any medium or format for the purpose of preservation. The author(s) or copyright owner(s) also agree that UNDIP-IR may keep more than one copy of this submission for purpose of security, back-up and preservation:
(http://eprints.undip.ac.id)

55,992 kN ≤ 152,312 kN (ok)

Menurut *"Centunion"* ikatan angin bawah merupakan ikatan angin sementara (*temporary bracing*), karena fungsi utamanya adalah sebagai penjaga kestabilan konstruksi jembatan rangka bentang satu, saat proses perakitan bentang yang lain (sistim kantilever), sehingga pada akhirnya ikatan angin ini bisa dicopot.

Selain alasan diatas bahwa gaya akibat tekanan angin bawah sudah dianggap bisa ditahan oleh gelagar-gelagar jembatan.

5.4.6 Rangka Utama

5.4.6.1 Pembebanan

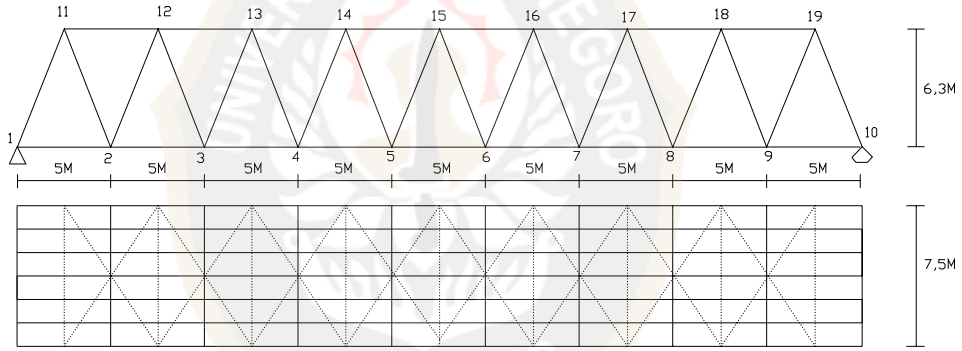

1. Beban Mati

a. Berat sendiri profil rangka baja

b. Ikatan Angin

P2 = (1/2*7,2*0,499) + (1/2*8,496*0,233)= 2,786 kN

P1 = 2*(1/2*8,496*0,233) = 1,979 kN

c. Beban reaksi gelagar melintang

P3 = 274,263 kN (melintang tengah)

P4 = 199,352 kN (melintang tepi)

This document is Undip Institutional Repository Collection. The author(s) or copyright owner(s) agree that UNDIP-IR may, without changing the content, translate the submission to any medium or format for the purpose of preservation. The author(s) or copyright owner(s) also agree that UNDIP-IR may keep more than one copy of this submission for purpose of security, back-up and preservation:
(http://eprints.undip.ac.id)

2. Beban Hidup Berjalan

a. Beban UDL

$$q = 8{,}0 * \left[0{,}5 + \frac{15}{L}\right] Kpa = 6{,}4 \text{Kpa} = 640 \text{ kg/m}^2 = 6{,}4 \text{ kN/m}^2$$

q = (6 kN/m^2*5,5m)/2+(3,2kN/m^2*0,25m) = 16,9 kN/m

b. Beban KEL

p = (44kN/m*5,5m/2)+(22kN/m*0,25m)*(0,5) =123,75 kN

3. Beban Tekanan Angin

a. Angin atas

b. Angin bawah

Beban-beban diatas diselesaikan dengan program SAP (lampiran)

5.4.6.2 Kombinasi Gaya Batang

Setelah gaya-gaya batang dari beban-beban diatas dikombinasikan maka didapat kelompok-kelompok gaya batang yang menentukan yaitu:

- Batang horisontal (1,10) P = 2487,486 kN (tarik)
- Batang horisontal (2,9) P = 6712,098 kN (tarik)
- Batang horisontal (3,8) P = 9935,865 kN (tarik)
- Batang horisontal (4,7) P = 12108,053 kN (tarik)
- Batang horisontal (5,6) P = 13229,580 kN (tarik)
- Batang horizontal (11,19) P = - 4764,348 kN (tekan)
- Batang horizontal (12,18) P = -8496,994 kN (tekan)
- Batang horizontal (13,17) P = -11173,420 kN (tekan)
- Batang horizontal (14,16) P = -12823,949 kN (tekan)
- Batang horizontal (15) P = -13399,628 kN (tekan)
- Batang diagonal (20,39) P = -6381,761 kN (tekan)
- Batang diagonal (21,38) P = 6205,888 kN (tarik)
- Batang diagonal (22,37) P = -4912,664 kN (tekan)
- Batang diagonal (23,36) P = 4854,772 kN (tarik)
- Batang diagonal (24,35) P = -3534,115 kN (tekan)
- Batang diagonal (25,34) P = 3464,701 kN (tarik)
- Batang diagonal (26,33) P = -2202,875 kN (tekan)

This document is Undip Institutional Repository Collection. The author(s) or copyright owner(s) agree that UNDIP-IR may, without changing the content, translate the submission to any medium or format for the purpose of preservation. The author(s) or copyright owner(s) also agree that UNDIP-IR may keep more than one copy of this submission for purpose of security, back-up and preservation:
(http://eprints.undip.ac.id)

- Batang diagonal (27,32) P = 2123,122 kN (tarik)
- Batang diagonal (28,31) P = -817,142 kN (tekan)
- Batang diagonal (29,30) P = 722,503 kN (tarik)

5.4.6.3 Pendimensian

1. Batang Horisontal (15)

L= 5 m, P = -13399,628 kN (tekan)

Dicoba profil IWF 458*417*30*50, dengan data profil :

f_y Mpa	A cm^2	W kg/m	H Mm	B mm	t_w mm	t_f mm	i_x mm	i_y mm	I_y cm^4
360	528,6	415	458	417	30	50	188	107	60500

Koefisien tekuk (sendi-sendi) K_e=1

$L_e = K_e*L$ = 1*5000 = 5000 mm

a. Tentukan kapasitas penampang (N_n)

Kelangsingan penampang

$$\lambda_{e-flens} = \left(\frac{417-30}{2*50}\right)*\sqrt{\frac{360}{250}} = 4{,}6 \le \lambda_{ey} = 16$$

$$\lambda_{e-web} = \left(\frac{458-(2*50)}{30}\right)*\sqrt{\frac{360}{250}} = 14{,}32 \le \lambda_{ey} = 45\,4$$

Karena semua elemen pelat adalah kurang dari batas kelangsingan, lebar efektif dari tiap elemen pelat adalah lebar aktual (K_f = 1)

Jadi $N_n = K_f*A_n*f_y$

= 1*52860*360

= 19029600 N

b. Tentukan kapasitas tekan unsur (N_c)

Kelangsingan unsur

$$\lambda = \frac{L_e}{i_{\min}} = \frac{5000}{107} = 47 \le 200 \text{ (batas kelangsingan batang tekan)}$$

$$\lambda_{ny} = \frac{L_e}{i_{\min}} * \sqrt{K_f * \frac{fy}{250}} = \frac{5000}{107} * \sqrt{1 * \frac{360}{250}} = 56{,}4$$

α_c = 0,815 (interpolasi)

This document is Undip Institutional Repository Collection. The author(s) or copyright owner(s) agree that UNDIP-IR may, without changing the content, translate the submission to any medium or format for the purpose of preservation. The author(s) or copyright owner(s) also agree that UNDIP-IR may keep more than one copy of this submission for purpose of security, back-up and preservation:
(http://eprints.undip.ac.id)

N_c = 0,815*19029,6= 15509,124 kN

$N_u \leq Ø*N_c$

13399 kN ≤ 0,9*15509,124 kN

1339,9 T ≤ 1395,82 T (ok)

2. Batang Horisontal (5,6)

L= 5 m, P = 13229,580 kN (tarik)

Dipakai profil IWF 458*417*30*50

a. Menentukan kuat tarik rencana

- Leleh unsur

$N_t = A_g*f_y$ = 52860*360 = 19029600 N

- Patahan unsur

$N_t = 0,85*K_t*A_n*f_u$ = 0,85*0,85*85%*52860*520 = 16880576,7 N

Ambil terkecil N_t = 16880576,7 N

$N_u \leq Ø*N_t$

13229,58 kN ≤ 0,9*16880,58 kN

1322,96 T ≤ 1519,25 T (ok)

b. Kelangsingan unsur

$$\lambda = \frac{L}{i_{\min}} = \frac{5000}{107} = 47 \leq 240 \text{ (konstruksi utama) ok}$$

Dengan cara perhitungan yang sama maka pendimensian rangka utama dapat ditabelkan sebagai berikut:

Tabel 5.4 Hasil Perhitungan Dimensi Rangka Utama

NO BATANG	POSISI BATANG	PANJANG BATANG m	GAYA BATANG N_u (kN)	PROFIL TERPILIH	α_c	KAPASITAS TEKAN UNSUR N_c (kN)	LELEH UNSUR N_t (kN)	PATAHAN UNSUR N_t kN	$N_u \leq Ø*N_n$
1,2,9,10	Horisontal	5	+6712,098	400*408*21*21	-	-	8005,98	7205,38	6712,098
3,8	Horisontal	5	+9935,865	428*407*20*35	-	-	11518,77	10366,89	9935,865
4,7	Horisontal	5	+12108,05	458*417*30*50	-	-	19029,6	16880,6	12108,05

This document is Undip Institutional Repository Collection. The author(s) or copyright owner(s) agree that UNDIP-IR may, without changing the content, translate the submission to any medium or format for the purpose of preservation. The author(s) or copyright owner(s) also agree that UNDIP-IR may keep more than one copy of this submission for purpose of security, back-up and preservation:
(http://eprints.undip.ac.id)

11,12,18, 19	Horisontal	5	-8496,994	428*407* 20*35	0,792	9255,85	-	-	8496,994
14,16	Horisontal	5	-12823,949	458*417* 30*50	0,815	13958,2	-	-	12823,949
20,21,38, 39	Diagonal	6,77	-6381,761	400*408* 21*21	0,783	8122,68	-	-	6381,76
22,23,33, 34	Diagonal	6,77	-4912,664	394*405* 18*18	0,779	5411,37	-	-	4912,664
24,25,34, 35	Diagonal	6,77	+3464,701	390*300* 10*16	-	-	4896	3908,78	3464,701
26-29,30-33	Diagonal	6,77	-2202,0875	386*299* 9*14	0,579	2253,03	-	-	2202,0875

A. Hubungan Gelagar Melintang Tengah dengan Rangka Utama

Baut mengalami geser dan tarik secara bersamaan!

P_u = 969231,78 N

a. Material penyambung

- Plat penyambung = t_p 20 mm f_{up} = 520 Mpa
- Baut mutu 8.8 = d 24 mm f_{uf} = 830 Mpa

A_c = 324 mm^2 A_s = 353 mm^2

b. Syarat jarak baut

Baut dipasang lurus

- Tengah $2,5*d \leq S \leq 7*d$ 60 – 168 diambil 140 mm
- Tepi $1,5*d \leq S1 \leq 3*d$ 36 – 72 diambil 64 mm

This document is Undip Institutional Repository Collection. The author(s) or copyright owner(s) agree that UNDIP-IR may, without changing the content, translate the submission to any medium or format for the purpose of preservation. The author(s) or copyright owner(s) also agree that UNDIP-IR may keep more than one copy of this submission for purpose of security, back-up and preservation:
(http://eprints.undip.ac.id)

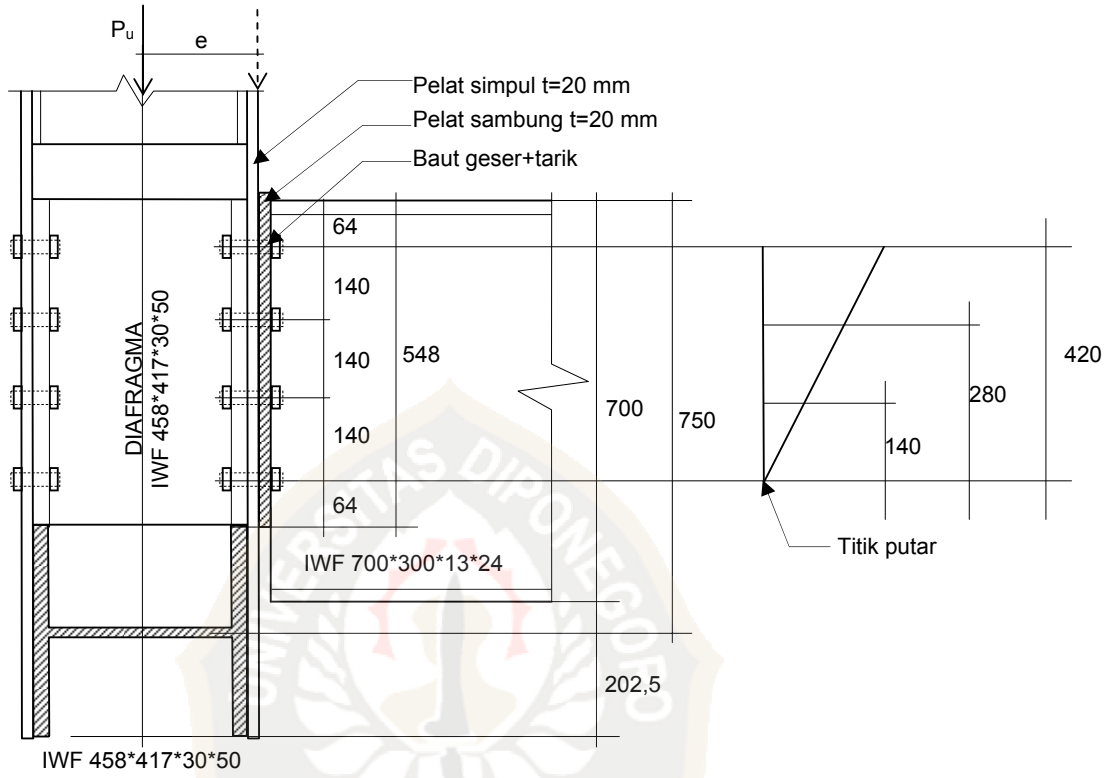

Gambar 5.35 Hubungan Gelagar Melintang Tengah Terhadap Rangka Utama

❖ "Metode pendekatan"

Kapasitas nominal penyambung

- Tegak lurus sumbu baut:

L_j = 548 mm (300 < L_j < 1300) $k_r = 1,075 - L_j/4000 = 0,938$

$N_{geser} = V_f$

$= 0,62 * f_{uf} * kr * n_c * A_c$

= 0,62*830*0,938*2*324

= 312786,23 N

$N_{tumpu} = V_b$

$= a_e * t_p * f_{up}$

= 64*10*520

= 332800 N

$N_{tumpu} = V_b$

$= 3,2 * d_f * t_p * f_{up}$

= 3,2*24*10*520

= 399360 N

Ambil terkecil N_{Vf} = 312786,23 N

- Searah sumbu baut:

This document is Undip Institutional Repository Collection. The author(s) or copyright owner(s) agree that UNDIP-IR may, without changing the content, translate the submission to any medium or format for the purpose of preservation. The author(s) or copyright owner(s) also agree that UNDIP-IR may keep more than one copy of this submission for purpose of security, back-up and preservation:
(http://eprints.undip.ac.id)

N_{tarik} $= N_{tf}$

$= A_s * f_{uf}$

$= 353*830$

$= 292990$ N

ΣY^2 $= 2*(140^2+280^2+420^2) = 548800$ mm^2

M $= P_u*e = 969231,78*(½*414+ 20) = 220015614,1$ Nmm

Akibat gaya geser $K_V = \frac{P_u}{n} = \frac{969231,78}{8} = 121153,973$ N

Akibat momen $K_H = \frac{M*Y}{\Sigma Y^2} = \frac{220015614,1*420}{548800} = 168379,297$ N

$$\left(\frac{K_V}{\phi * V_f}\right)^2 + \left(\frac{K_H}{\phi * N_{tf}}\right)^2 = \left(\frac{121153,973}{0,7*312786,23}\right)^2 + \left(\frac{168379,297}{0,7*292990}\right)^2 = 0,674 \leq 1 \quad \text{(ok)}$$

Pola baut geser dan tarik bisa digunakan!

B. Hubungan Gelagar Melintang Tepi dengan Rangka Utama

Baut mengalami geser dan tarik secara bersamaan!

$P_u = 685390,01$ N

a. Material penyambung (idem)

b. Syarat jarak baut

Baut dipasang lurus

- Tengah $2,5*d \leq S \leq 7*d$ 60 – 168 diambil 150 mm
- Tepi $1,5*d \leq S1 \leq 3*d$ 36 – 72 diambil 69 mm

This document is Undip Institutional Repository Collection. The author(s) or copyright owner(s) agree that UNDIP-IR may, without changing the content, translate the submission to any medium or format for the purpose of preservation. The author(s) or copyright owner(s) also agree that UNDIP-IR may keep more than one copy of this submission for purpose of security, back-up and preservation:
(http://eprints.undip.ac.id)

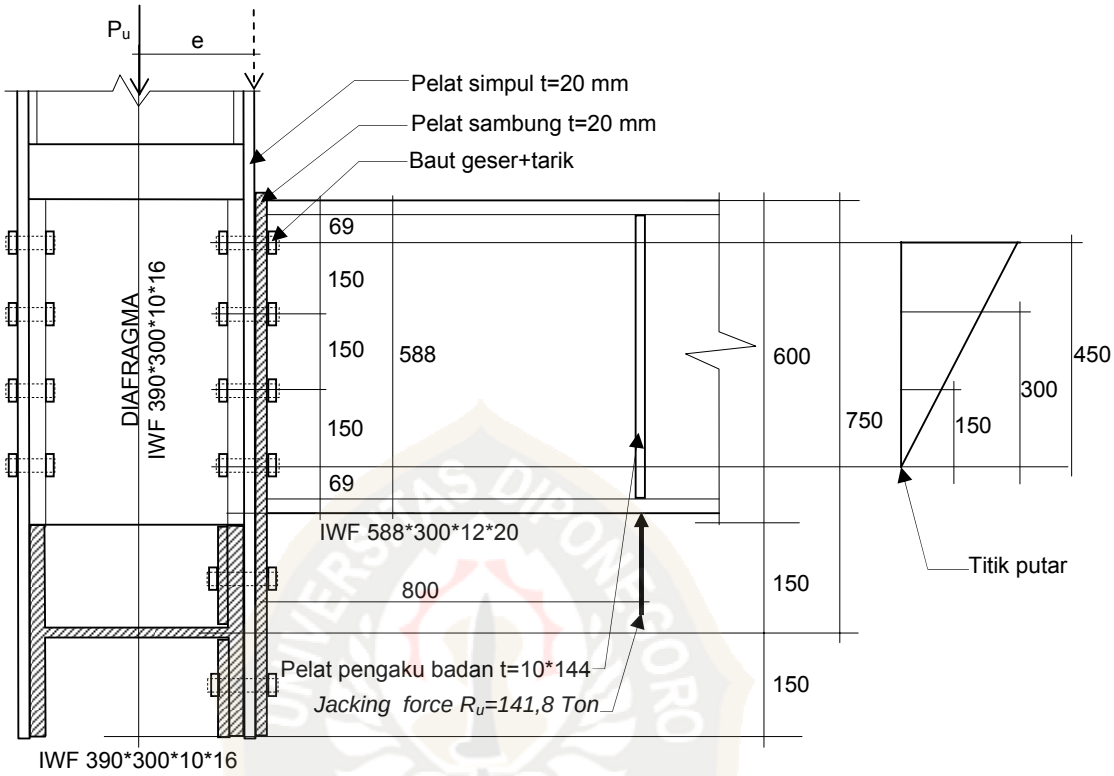

Gambar 5.36 Hubungan Gelagar Melintang Tepi Terhadap Rangka Utama

❖ "Metode pendekatan"

Kapasitas nominal penyambung

- Tegak lurus sumbu baut:

L_j = 588 mm (300 < L_j < 1300) $k_r = 1{,}075 - L_j/4000$ = 0,928

$N_{geser} = V_f$

$= 0{,}62 * f_{uf} * kr * n_c * A_c$

= 0,62*830*0,928*2*324

= 309451,622 N

$N_{tumpu} = V_b$

$= 3{,}2 * d_f * t_p * f_{up}$

= 3,2*24*10*520

= 399360 N

$N_{tumpu} = V_b$

$= a_e * t_p * f_{up}$

= 69*10*520

= 358800 N

Ambil terkecil N_{Vf} = 309451,622 N

- Searah sumbu baut:

This document is Undip Institutional Repository Collection. The author(s) or copyright owner(s) agree that UNDIP-IR may, without changing the content, translate the submission to any medium or format for the purpose of preservation. The author(s) or copyright owner(s) also agree that UNDIP-IR may keep more than one copy of this submission for purpose of security, back-up and preservation:
(http://eprints.undip.ac.id)

N_{tarik} $= N_{tf}$

$= 292990$ N

ΣY^2 $= 2*(150^2+300^2+450^2) = 630000$ mm^2

M $= P_u*e = 685390{,}01*(\frac{1}{2}*390+20) = 147358852{,}2$ Nmm

Akibat gaya geser $K_V = \frac{P_u}{n} = \frac{685390{,}01}{8} = 85673{,}751$ N

Akibat momen $K_H = \frac{M*Y}{\sum Y^2} = \frac{147358852{,}2*450}{630000} = 105256{,}323$ N

$$\left(\frac{K_V}{\phi*V_f}\right)^2 + \left(\frac{K_H}{\phi*N_{tf}}\right)^2 = \left(\frac{85673{,}751}{0{,}7*309451{,}622}\right)^2 + \left(\frac{105256{,}323}{0{,}7*292990}\right)^2 = 0{,}416 \le 1 \text{ (ok)}$$

Pola baut geser dan tarik bisa digunakan!

C. Hubungan Antar Rangka Utama

a. Material penyambung

- Plat penyambung sayap $= t_{pf}$ 20 mm f_{up} = 410 Mpa
  Plat penyambung badan $= t_{pw}$ 15 mm f_{up} = 410 Mpa
- Baut mutu 8.8 = d 20 mm f_{uf} = 830 Mpa
  A_c = 225 mm^2 A_s = 245 mm^2

b. Syarat jarak baut

Baut dipasang lurus

- Tengah $2{,}5*d \le S \le 7*d$ 50 – 140 diambil 100 mm
- Tepi $1{,}5*d \le S1 \le 3*d$ 30 – 60 diambil 50 mm

Baut dipasang selang-seling

- Tengah V $2{,}5*d \le s_g \le 7*d$ 50 – 140 diambil 100 mm
- Tengah H $s_p \le 7*d - \frac{1}{2}*s_g$ 90 diambil 80 mm

c. Kekuatan nominal penyambung

- Untuk sambungan irisan 2 $N_{geser} = V_f$
  $= 0{,}62*f_{uf}*kr*n_c*A_c$
  $= 0{,}62*830*1*2*225$
  $= 231570$ N

  Jika dengan pelat pengisi, $N_{geser} = 85\%*V_f = 196834{,}5$ N

This document is Undip Institutional Repository Collection. The author(s) or copyright owner(s) agree that UNDIP-IR may, without changing the content, translate the submission to any medium or format for the purpose of preservation. The author(s) or copyright owner(s) also agree that UNDIP-IR may keep more than one copy of this submission for purpose of security, back-up and preservation:
(http://eprints.undip.ac.id)

- Untuk sambungan irisan 1 N_{geser} $= V_f$

$= 0,62 * f_{uf} * kr * n_c * A_c$

= 0,62*830*1*1*225

= 115785 N

Jika dengan pelat pengisi, N_{geser} $= 85\% * V_f$ = 98417,25 N

N_{tumpu} $= V_b$ N_{tumpu} $= V_b$

$= a_e * t_p * f_{up}$ $= 3,2 * d_f * t_p * f_{up}$

= 50*20*410 = 3,2*20*20*410

= 410000 N = 524800 N

N_{tumpu} $= V_b$

$= a_e * t_p * f_{up}$

= 100*20*410

= 820000 N

d. Contoh perhitungan jumlah baut pada batang dengan P_u terbesar.

Sambungan batang-batang horisontal direncanakan menggunakan irisan 2, ini dimaksudkan untuk memperkecil jumlah baut agar kebutuhan luasan pelat simpul menjadi lebih kecil.

1. Batang horisontal tarik (6)

Besar gaya batang P_u = 7160,929 kN

- Kekuatan nominal penyambung

Untuk sambungan irisan 2 N_{geser} $= V_f$ = 231570 N

N_{tumpu} $= V_b$ = 410000 N

= 524800 N

= 820000 N

Pilih terkecil N = 231570 N

- Jumlah baut

$$n = \frac{P_u}{\phi * N} = \frac{7160929}{0,7 * 231570} = 45 \sim 48 \text{ buah}$$

Pada sayap = 16+16 buah

Pada badan = 16 buah

This document is Undip Institutional Repository Collection. The author(s) or copyright owner(s) agree that UNDIP-IR may, without changing the content, translate the submission to any medium or format for the purpose of preservation. The author(s) or copyright owner(s) also agree that UNDIP-IR may keep more than one copy of this submission for purpose of security, back-up and preservation:
(http://eprints.undip.ac.id)

- Cek kekuatan tarik profil

A_g = 29540 mm^2

$A_{n1} = A_g - (n*d_l*t_f)-(n*d_l*t_w)$ = 29540-(4*22*28)-(2*22*18) = 26284 mm^2

$$A_{n2} = A_g - [(n*d_l*t_f) + (\Sigma \frac{s_p^{\ 2} * t_f}{4 * s_g})]-(n*d_l*t_w)$$

$$= 29540-[(8*22*28)+(2*\frac{2*80^2*28}{4*100})]-(2*22*18) = 22028 \text{ mm}^2$$

Pilih terkecil A_{n2} = 22028 mm^2

Leleh unsur $N_t = A_g * f_y$ = 29540*360 = 9570960 N

Patahan unsur $N_t = 0,85*K_t*A_n*f_{up}$ = 0,85*0,85*22028*520 = 8275919 N

Pilih terkecil N_t = 8275919 N

$P_u \leq Ø*N_t$

7160,929 kN ≤ 0,9*8275,919 kN

7160,929 kN ≤ 7448,328 kN (ok)

2. Batang horisontal tekan (18)

Besar gaya batang P_u = -7355 kN

- Kekuatan nominal penyambung

Untuk sambungan irisan 2 $N_{geser} = V_f$ = 231570 N

$N_{tumpu} = V_b$ = 820000 N

= 524800 N

Pilih terkecil N = 231570 N

- Jumlah baut

$$n = \frac{P_u}{\phi * N} = \frac{7355000}{0,7*231570} = 46 \sim 48 \text{ buah}$$

Pada sayap = 16+16 buah

Pada badan = 16 buah

Berikut tabel jumlah baut rangka utama :

This document is Undip Institutional Repository Collection. The author(s) or copyright owner(s) agree that UNDIP-IR may, without changing the content, translate the submission to any medium or format for the purpose of preservation. The author(s) or copyright owner(s) also agree that UNDIP-IR may keep more than one copy of this submission for purpose of security, back-up and preservation:
(http://eprints.undip.ac.id)

Tabel 5.2 Jumlah Baut Rangka Utama

SIMPUL	BATANG	IRISAN SAMBUNGAN	TEREDUKSI	GAYA BATANG (kN)	JUMLAH BAUT (n)	TERPASANG			JUMLAH BAUT TERPASANG (n)
						SAYAP	SAYAP	BADAN	
1	H-1	1	-	1119,024	14	8	8	-	16
	D-24	1	-	-3020,966	38	20	20	-	40
2	D-24	1	-	-3020,966	38	20	20	-	40
	H-13	1	-	-2230,898	28	14	14	-	28
	D-36	1	-	2991,843	37	20	20	-	40
3	H-1	2	-	1119,024	7	8	8	4	20
	D-36	1	-	2991,843	37	20	20	-	40
	D-25	1	-	-2507,554	31	20	20	-	40
	H-2	2	-	3115,38	20	8	8	8	24
4	D-25	1	-	-2507,554	31	16	16	-	32
	H-13	2	-	-2230,898	14	10	10	6	26
	H-14	2	-	-4070,94	26	10	10	10	30
	D-37	1	-	2486,201	31	16	16	-	32
5	H-2	2	√	3115,38	23	10	10	8	28
	D-37	1	√	2486,201	37	20	20	-	40
	D-26	1	√	-2029,047	30	20	20	-	40
	H-3	2	-	4669,811	29	10	10	10	30
6	D-26	1	√	-2029,047	30	16	16	-	32
	H-14	2	√	-4070,94	30	12	12	10	34
	H-15	2	-	-5513,735	35	12	12	12	36
	D-38	1	√	2006,882	30	16	16	-	32
7	H-3	2	-	4669,811	29	14	14	10	38
	D-38	1	√	2006,882	30	16	16	-	32
	D-27	1	√	-1567,916	23	16	16	-	32
	H-4	2	-	5957,774	37	14	14	14	42
8	D-27	1	√	-1567,916	23	12	12	-	24
	H-15	2	√	-5513,735	40	14	14	14	42
	H-16	2	-	-6535,412	41	14	14	14	42
	D-39	1	√	1547,16	23	12	12	-	24
9	H-4	2	√	5957,774	44	16	16	16	48
	D-39	1	√	1547,16	23	12	12	-	24
	D-28	1	√	-1116,649	17	12	12	-	24
	H-5	2	-	6765,158	42	16	16	14	46
10	D-28	1	√	-1116,649	17	10	10	-	20

This document is Undip Institutional Repository Collection. The author(s) or copyright owner(s) agree that UNDIP-IR may, without changing the content, translate the submission to any medium or format for the purpose of preservation. The author(s) or copyright owner(s) also agree that UNDIP-IR may keep more than one copy of this submission for purpose of security, back-up and preservation:
(http://eprints.undip.ac.id)

	H-16	2	-	-6535,412	41	16	16	14	46
	H-17	2	-	-7156,632	45	16	16	16	48
	D-40	1	√	1093,32	16	10	10	-	20
11	H-5	2	-	6765,158	42	16	16	14	46
	D-40	1	√	1093,32	16	8	8	-	16
	D-29	1	√	-681,717	10	8	8	-	16
	H-6	2	-	7160,929	45	16	16	16	48
12	D-29	1	√	-681,717	10	6	6	-	12
	H-17	2	-	-7156,632	45	16	16	16	48
	H-18	2	-	-7355	46	16	16	16	48
	D-41	1	√	658,801	10	6	6	-	12
13	H-6	2	-	7160,929	45	16	16	16	48
	D-41	1	√	658,801	10	6	6	-	12
	D-30	1	√	658,801	10	6	6	-	12
	H-7	2	-	7160,929	45	16	16	16	48

Catatan :

1. Pada jumlah baut terpasang terlihat jumlah baut yang lebih besar dan seragam (terutama pada sayap), ini dimaksudkan untuk mempermudah perhitungan luas pelat simpulnya dan penataan pembautannya.
2. H = batang horisontal
   D = batang diagonal
   √ = tereduksi 15% akibat penggunaan pelat pengisi

This document is Undip Institutional Repository Collection. The author(s) or copyright owner(s) agree that UNDIP-IR may, without changing the content, translate the submission to any medium or format for the purpose of preservation. The author(s) or copyright owner(s) also agree that UNDIP-IR may keep more than one copy of this submission for purpose of security, back-up and preservation:
(http://eprints.undip.ac.id)