LAMPIRAN

LAMPIRAN 1

PERHITUNGAN RALAT DENSITAS RADIOGRAF

Perhitungan untuk mendapatkan ralat densitas dilakukan dengan perumusan sebagai berikut:

a. Nilai rata-rata densitas: $\overline{D} = \frac{1}{k}\sum_{k=1}^{k} D_k$

b. Simpangan Deviasi: $S_{\overline{D}} = \sqrt{\frac{\sum(D_i - \overline{D})^2}{(k-1)}}$

c. Nilai densitas : $D = (\overline{D} \pm S_{\overline{D}})$

d. Nilai kontras: $C = (D_2 - D_1)$

LAMPIRAN 2

TABEL PERHITUNGAN RALAT DENSITAS FILM RADIOGRAF

1. Tabel Perhitungan Ralat Densitas Pada Film Radiograf dengan Kondisi Penyinaran Tetap kecuali Waktu (Grid Bergerak)

Tabel 1. 1. Kondisi Penyinaran 65 kV, 200 mA, 0,1 detik

Step	D_1	D_2	D_3	$\overline{Dt}$	$S_{\overline{Dt}}$	Dt = $\overline{Dt} \pm S_{\overline{Dt}}$
1	0.57	0.56	0.56	0.56	0.00	0.56 ± 0.00
2	0.46	0.46	0.44	0.45	0.01	0.45 ± 0.01
3	0.37	0.37	0.37	0.37	0.00	0.37 ± 0.00
4	0.29	0.28	0.28	0.28	0.00	0.28 ± 0.00
5	0.23	0.23	0.22	0.23	0.00	0.23 ± 0.00
6	0.18	0.17	0.16	0.17	0.01	0.17 ± 0.01
7	0.13	0.13	0.12	0.13	0.00	0.13 ± 0.00
8	0.10	0.10	0.10	0.10	0.00	0.10 ± 0.00
9	0.08	0.08	0.08	0.08	0.00	0.08 ± 0.00
10	0.06	0.06	0.06	0.06	0.00	0.06 ± 0.00

Hasil tersebut sudah dikurangi base fog

Tabel 1.2. Kondisi Penyinaran 65 kV, 200 mA, 0.2 detik

Step	D_1	D_2	D_3	$\overline{Dt}$	$S_{\overline{Dt}}$	Dt = $\overline{Dt} \pm S_{\overline{Dt}}$
1	1.32	1.34	1.34	1.33	0.01	1.33 ± 0.01
2	1.16	1.19	1.18	1.18	0.01	1.18 ± 0.01
3	1.03	1.03	1.00	1.02	0.01	1.02 ± 0.01
4	0.88	0.88	0.87	0.88	0.00	0.88 ± 0.00
5	0.74	0.73	0.73	0.73	0.00	0.73 ± 0.00
6	0.62	0.61	0.60	0.61	0.01	0.61 ± 0.01
7	0.46	0.46	0.46	0.46	0.00	0.46 ± 0.00
8	0.39	0.37	0.37	0.38	0.01	0.38 ± 0.01
9	0.31	0.31	0.33	0.32	0.01	0.32 ± 0.01
10	0.25	0.24	0.25	0.25	0.00	0.25 ± 0.00

Hasil tersebut sudah dikurangi base fog

Tabel 1.3. Kondisi Penyinaran 65 kV, 200 mA, 0.3 detik

Step	D_1	D_2	D_3	$\overline{Dt}$	$S_{\overline{Dt}}$	Dt = $\overline{Dt} \pm S_{\overline{Dt}}$
1	1.84	1.83	1.81	1.83	0.02	1.83 ± 0.02
2	1.70	1.67	1.65	1.67	0.03	1.67 ± 0.03
3	1.53	1.50	1.49	1.51	0.02	1.51 ± 0.02
4	1.35	1.31	1.32	1.33	0.02	1.33 ± 0.02
5	1.17	1.13	1.11	1.14	0.03	1.14 ± 0.03
6	0.97	0.95	0.95	0.96	0.01	0.96 ± 0.01
7	0.81	0.83	0.81	0.82	0.01	0.82 ± 0.01
8	0.70	0.69	0.67	0.69	0.02	0.69 ± 0.02
9	0.58	0.58	0.55	0.57	0.02	0.57 ± 0.02
10	0.48	0.47	0.47	0.47	0.01	0.47 ± 0.01

Hasil tersebut sudah dikurangi base fog

Tabel 1.4. Kondisi Penyinaran 65 kV, 200 mA, 0.4 detik

Step	D_1	D_2	D_3	$\overline{Dt}$	$S_{\overline{Dt}}$	Dt = $\overline{Dt} \pm S_{\overline{Dt}}$
1	2.03	2.00	2.00	2.01	0.02	2.01 ± 0.02
2	1.91	1.88	1.86	1.88	0.03	1.88 ± 0.03
3	1.73	1.72	1.71	1.72	0.01	1.72 ± 0.01
4	1.56	1.55	1.57	1.56	0.01	1.56 ± 0.01
5	1.42	1.39	1.39	1.40	0.02	1.40 ± 0.02
6	1.23	1.21	1.23	1.22	0.01	1.22 ± 0.01
7	1.09	1.06	1.07	1.07	0.02	1.07 ± 0.02
8	0.95	0.92	0.93	0.93	0.02	0.93 ± 0.02
9	0.80	0.78	0.79	0.79	0.01	0.79 ± 0.01
10	0.66	0.65	0.66	0.66	0.01	0.66 ± 0.01

Hasil tersebut sudah dikurangi base fog.

Tabel 1.5. Kondisi Penyinaran 65 kV, 200 mA, 0.5 detik

Step	D_1	D_2	D_3	$\overline{Dt}$	$S_{\overline{Dt}}$	Dt = $\overline{Dt} \pm S_{\overline{Dt}}$
1	2.28	2.26	2.25	2.26	0.02	2.26 ± 0.02
2	2.06	2.04	2.03	2.04	0.02	2.04 ± 0.02
3	1.91	1.90	1.89	1.90	0.01	1.90 ± 0.01
4	1.77	1.77	1.75	1.76	0.01	1.76 ± 0.01
5	1.61	1.58	1.59	1.59	0.02	1.59 ± 0.02
6	1.44	1.42	1.41	1.42	0.02	1.42 ± 0.02
7	1.28	1.26	1.27	1.27	0.01	1.27 ± 0.01
8	1.13	1.12	1.12	1.12	0.01	1.12 ± 0.01
9	0.99	0.97	0.96	0.97	0.02	0.97 ± 0.02
10	0.84	0.83	0.84	0.84	0.01	0.84 ± 0.01

Hasil tersebut sudah dikurangi base fog.

Tabel 1.6. Kondisi Penyinaran 65 kV, 200 mA, 0.6 detik

Step	D_1	D_2	D_3	$\overline{Dt}$	$S_{\overline{Dt}}$	Dt = $\overline{Dt} \pm S_{\overline{Dt}}$
1	2.39	2.37	2.36	2.37	0.02	2.37 ± 0.02
2	2.30	2.28	2.29	2.29	0.01	2.29 ± 0.01
3	2.19	2.18	2.17	2.18	0.01	2.18 ± 0.01
4	2.04	2.04	2.03	2.04	0.01	2.04 ± 0.01
5	1.91	1.90	1.90	1.90	0.01	1.90 ± 0.01
6	1.75	1.75	1.75	1.75	0.00	1.75 ± 0.00
7	1.63	1.60	1.61	1.61	0.02	1.61 ± 0.02
8	1.48	1.47	1.47	1.47	0.01	1.47 ± 0.01
9	1.22	1.21	1.24	1.22	0.02	1.22 ± 0.02
10	1.09	1.06	1.10	1.08	0.02	1.08 ± 0.02

Hasil tersebut sudah dikurangi base fog.

2. Tabel Perhitungan Ralat Densitas Pada Film Radiograf dengan Kondisi Penyinaran Tetap kecuali Waktu (grid Diam)

Tabel 2.1. Kondisi Penyinaran 65 kV, 200 mA, 0.1 detik

Step	D_1	D_2	D_3	$\overline{Dt}$	$S_{\overline{Dt}}$	Dt = $\overline{Dt} \pm S_{\overline{Dt}}$
1	0.34	0.34	0.34	0.34	0.00	0.34 ± 0.00
2	0.27	0.27	0.27	0.27	0.00	0.27 ± 0.00
3	0.21	0.21	0.21	0.21	0.00	0.21 ± 0.00
4	0.16	0.16	0.15	0.16	0.01	0.16 ± 0.01
5	0.12	0.12	0.12	0.12	0.00	0.12 ± 0.00
6	0.09	0.08	0.09	0.09	0.01	0.09 ± 0.01
7	0.06	0.06	0.07	0.06	0.01	0.06 ± 0.01
8	0.05	0.05	0.05	5.00	0.00	5.00 ± 0.00
9	0.01	0.01	0.01	0.01	0.00	0.01 ± 0.00
10	0.00	0.00	0.00	0.00	0.00	0.00 ± 0.00

Hasil tersebut sudah dikurangi base fog.

Tabel 2.2. Kondisi Penyinaran 65 kV, 200 mA, 0.2 detik

Step	D_1	D_2	D_3	$\overline{Dt}$	$S_{\overline{Dt}}$	Dt = $\overline{Dt} \pm S_{\overline{Dt}}$
1	0.97	0.98	0.97	0.97	0.00	0.97 ± 0.00
2	0.83	0.83	0.83	0.83	0.00	0.83 ± 0.00
3	0.69	0.67	0.67	0.68	0.01	0.68 ± 0.01
4	0.55	0.56	0.55	0.55	0.00	0.55 ± 0.00
5	0.44	0.45	0.44	0.44	0.00	0.44 ± 0.00
6	0.34	0.35	0.35	0.35	0.00	0.35 ± 0.00
7	0.29	0.27	0.27	0.28	0.01	0.28 ± 0.01
8	0.21	0.22	0.21	0.21	0.00	0.21 ± 0.00
9	0.18	0.17	0.17	0.17	0.00	0.17 ± 0.00
10	0.14	0.14	0.14	0.14	0.00	0.14 ± 0.00

Hasil tersebut sudah dikurangi base fog.

Tabel 2.3. Kondisi Penyinaran 65 kV, 200 mA, 0.3 detik

Step	D_1	D_2	D_3	$\overline{Dt}$	$S_{\overline{Dt}}$	Dt = $\overline{Dt} \pm S_{\overline{Dt}}$
1	1.52	1.52	1.52	1.52	0.00	1.52 ± 0.00
2	1.34	1.34	1.34	1.34	0.00	1.34 ± 0.00
3	1.17	1.17	1.17	1.17	0.00	1.17 ± 0.00
4	0.99	0.99	1.00	0.99	0.01	0.99 ± 0.01
5	0.84	0.84	0.84	0.84	0.00	0.84 ± 0.00
6	0.69	0.68	0.67	0.68	0.01	0.68 ± 0.01
7	0.56	0.57	0.57	0.57	0.01	0.57 ± 0.01
8	0.47	0.47	0.48	0.47	0.01	0.47 ± 0.01
9	0.38	0.37	0.37	0.37	0.01	0.37 ± 0.01
10	0.31	0.31	0.30	0.31	0.01	0.31 ± 0.01

Hasil tersebut sudah dikurangi base fog.

Tabel 2.4. Kondisi Penyinaran 65 kV, 200 mA, 0.4 detik

Step	D_1	D_2	D_3	$\overline{Dt}$	$S_{\overline{Dt}}$	Dt = $\overline{Dt} \pm S_{\overline{Dt}}$		
1	1.76	1.76	1.77	1.76	0.01	1.76	±	0.01
2	1.61	1.62	1.61	1.61	0.01	1.61	±	0.01
3	1.45	1.45	1.44	1.45	0.01	1.45	±	0.01
4	1.26	1.26	1.26	1.26	0.00	1.26	±	0.00
5	1.10	1.09	1.10	1.10	0.01	1.10	±	0.01
6	0.95	0.94	0.94	0.94	0.01	0.94	±	0.01
7	0.81	0.80	0.80	0.80	0.01	0.80	±	0.01
8	0.68	0.67	0.67	0.67	0.01	0.67	±	0.01
9	0.56	0.56	0.56	0.56	0.00	0.56	±	0.00
10	0.49	0.48	0.48	0.48	0.01	0.48	±	0.01

Hasil tersebut sudah dikurangi base fog.

Tabel 2.5. Kondisi Penyinaran 65 kV, 200 mA, 0.5 detik

Step	D_1	D_2	D_3	$\overline{Dt}$	$S_{\overline{Dt}}$	Dt = $\overline{Dt} \pm S_{\overline{Dt}}$		
1	1.95	1.94	1.93	1.94	0.01	1.94	±	0.01
2	1.79	1.79	1.80	1.79	0.01	1.79	±	0.01
3	1.65	1.64	1.64	1.64	0.01	1.64	±	0.01
4	1.51	1.50	1.49	1.50	0.01	1.50	±	0.01
5	1.32	1.31	1.31	1.31	0.01	1.31	±	0.01
6	1.14	1.13	1.14	1.14	0.01	1.14	±	0.01
7	1.00	1.00	0.99	1.00	0.01	1.00	±	0.01
8	0.86	0.86	0.86	0.86	0.00	0.86	±	0.00
9	0.72	0.73	0.73	0.73	0.01	0.73	±	0.01
10	0.62	0.61	0.61	0.61	0.01	0.61	±	0.01

Hasil tersebut sudah dikurangi base fog.

LAMPIRAN 3

Tabel Penghitungan Kontras Radiograf

Tabel 3.1. Penghitungan Kontras Dengan kondisi Penyinaran 65 kV, 200mA, dengan variasi waktu eksposi (Grid Bergerak)

no	S	D1	D10	K
1	0.1	0.56	0.06	0.50
2	0.2	1.33	0.25	1.08
3	0.3	1.83	0.47	1.36
4	0.4	2.01	0.66	1.35
5	0.5	2.26	0.84	1.42

Tabel 3.2. Penghitungan Kontras Dengan Kondisi Penyinaran 65 kV, 200 mA dengan variasi waktu eksposi (Grid Diam)

no	S	D1	D10	K
1	0.1	0.34	0.00	0.34
2	0.2	0.97	0.14	0.83
3	0.3	1.52	0.31	1.21
4	0.4	1.76	0.48	1.28
5	0.5	1.94	0.61	1.33

LAMPIRAN 4

OPERATION MANUAL
FOR
BUCKY DEVICE
BF-10 (FOR BUCKY TABLE, DIAGNOSTIC TABLE)
BF-11 (FOR BUCKY STAND)

PLEASE READ CAREFULLY
AND SAVE THIS MANUAL

SHIMADZU CORPORATION
KYOTO JAPAN

Table of contents

	Page
1. Application	1
2. Constitution	1
3. Specifications	1
3.1 Dimensions	1
3.2 Usable size of film	1
3.3 Grid	1
4. Operation	2
4.1 Connection of low voltage lead wire	2
4.2 Insertion of cassette	2
4.3 Replacement of Grid	2
5. Caution	3

1. Application

In combination with an X-ray high tension unit and an X-ray tube unit, this Bucky device BF-10 and BF-11 is used for Bucky radiography in vertical, horizontal and tilted positions. When used, this Bucky is generally incorporated in a vertical Bucky radiographic stand (in the case of BF-11), a Bucky table or a diagnostic table (in the case of BF-10).

2. Constitution

The Bucky BF-10 and BF-11 comprises the following parts:

2.1 Bucky main

2.2 Driving section

2.3 Switch section

2.4 Grid assembly

2.5 Tray

3. Specifications

The following are the specifications of Bucky BF-10 and BF-11.

3.1 Dimensions: 590 x 570 mm

3.2 Usable size of film:

Any size from 14 x 17 to 6½ x 8½ by lengthwise or crosswise, full exposure

3.3 Grid

Grid ratio R=8/1

Focal distance f_0=100 cm (in the case of Bucky table or diagnostic table . . . . . Bucky BF-10)

f_0=150 cm (in the case of vertical Bucky radiographic stand . . . . . Bucky BF-11)

Strips density: N=28 Lines/cm (BF-10)

N=34 Lines/cm (BF-11)

If required on a special order, other grids than described above are also available.

4. Operation (ref. Figs. 1 - 2)

4.1 Connection of low voltage lead wire

Connect terminals B_1, B_2, L_0, E and L_{100} of the low voltage lead wire (4) to the corresponding terminals of the control of the X-ray unit.

4.2 Insertion of cassette

4.2.1 Draw out the cassette tray (2) by the grip (3)

4.2.2 Rotate the thumb piece (8) counterclockwise and the 2 cassette arresters (9) are loosened to make a gap suitable for insertion of a cassette.

Then, insert a cassette in the gap and while pressing the cassette firmly, lock it by rotating the thumb piece (8) clockwise.

Since these cassette arresters (9) are bilaterally adjustable, any size of cassette as mentioned in Item 3.2. above, when inserted in the gap between arresters, can be easily locked in the center position.

Inserting a cassette, lock it by thrusting it upward and put the spacer to down side of cassette in the case of a vertical Bucky radiographic stand, and lock the cassette after aligning the center line of the cassette with the (A) point of the V-indent at the center of cassette arresters (9) in other cases than a vertical Bucky radiographic stand. (ref. Fig. 2)

4.2.3 Return the cassette tray (2) to the original position.

4.2.4 In taking off the cassette tray (2), first draw it out as far as it stops and push the lock piece (10) and then take (2) off.

4.2.5 Insertion of cassette tray is possible from both sides of the bucky device.

4.3 Replacement of Grid

This Bucky device allows a grid to be replaced with easy operations.

The replacement of grid can be achieved in the following procedures.

4.3.1 Dimensions of replaceable grid

438 (lattice-directionally) x 479 mm

4.3.2 Turn the line switch on.

4.3.3 Remove the cassette tray. (See 4.2.4.)

Pull the knob (6) and the rails for cassette tray, on which the grid is mounted, are inclined. This allows the motor to run and the grid to move in your direction.

4.3.4 When the lever (11) is raised up the grid comes out by the spring action. Remove the grid and replace it to another.

Care should be taken not to reverse the grid.

4.3.5 Insert the replaced grid to the rail for grid, and make sure that the grid is across the stopper (12) .

4.3.6 As soon as the grid is raised up, the grid is reset in the original position.

4.3.7 Set the cassette tray in a previous manner.

5. Caution

In advance to assembling the table top, be sure to remove the screw that is fixing the grid of Bucky unit.

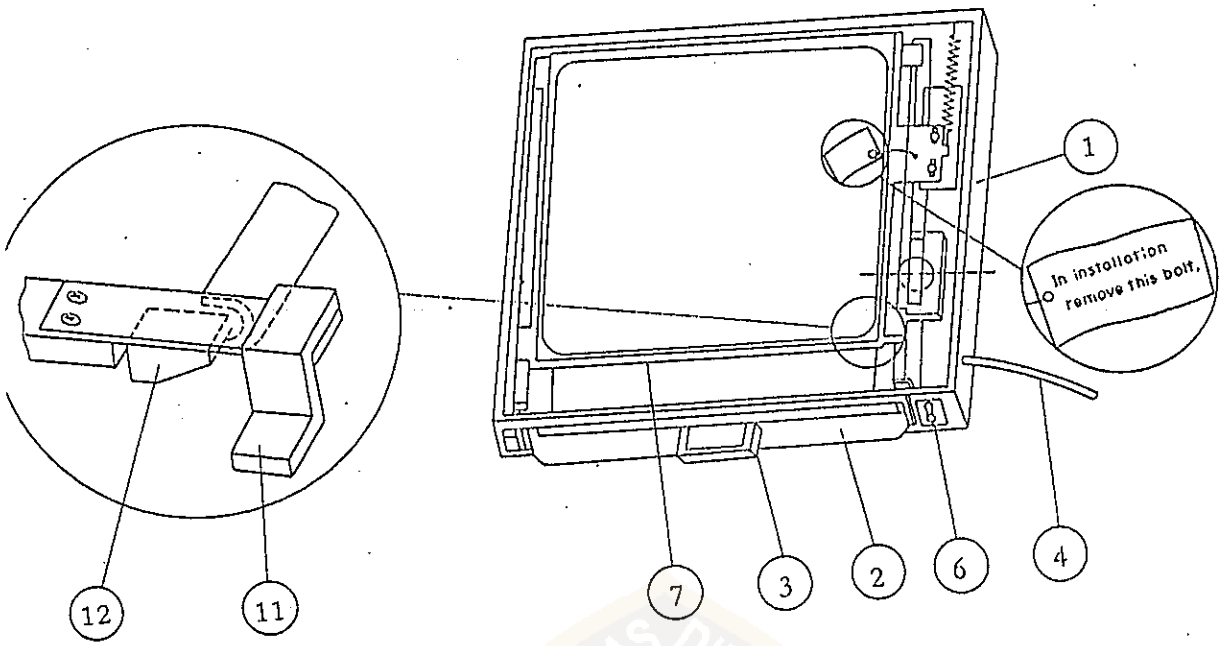

1	Bucky frame	2	Cassette tray	3	Grip
4	Low voltage lead wire	6	Knob	7	Grid holder
8	Thumb piece	9	Cassette arrester	10	Lock piece
11	Lever	12	Stopper		

Fig. 1 Whole view

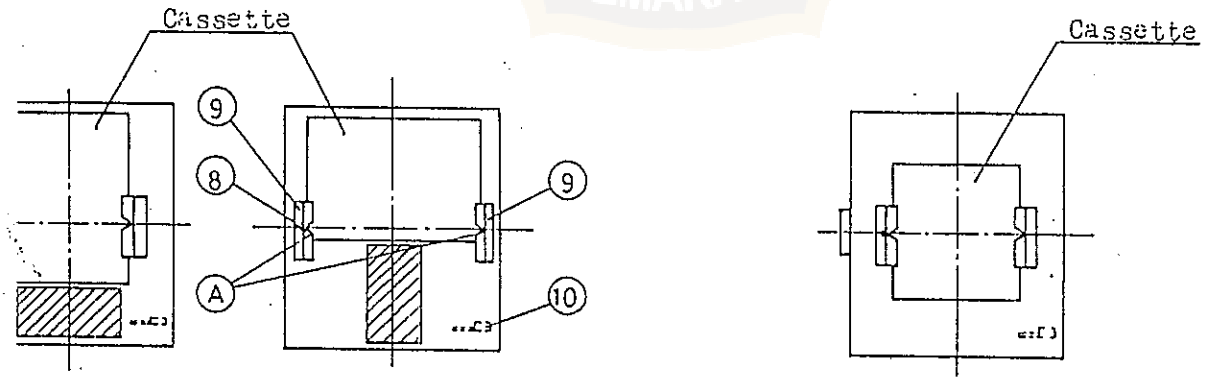

(for use on vertical radiographic stand) (for use on Bucky table or diagnostic table)

Fig. 2 Cassette rock

PARTS LIST

FOR

BUCKY DEVICE BF-10, 11

PARTS LIST

FOR

BUCKY DEVICE BF-10, 11

SHIMADZU CORPORATION

KYOTO JAPAN

Bucky Device BF-10, (Table Type) BF-10 501-93378-01

BF-11, (Stand Type) BF-11 501-93378-02

Ref No.	Description		Part No.
1	Main frame	ワ　ク	501-93381
2	Tray	トレイ	501-93379
3	Grid frame	グリッドワク	501-92228
5	Tray rail	トレイレール	501-92350
10	Shaft	カイテンチュウシンジク	501-56862
19	Rail support	レールホジカナグ	501-56863-01
21	Roller support	ローラダイ	501-93284-01
22	Roller support	ローラダイ	501-93284-02
23	Tray stopper	トレイレールアタリ	501-56865
28	Bearing, DR-16-H4	ベアリング	030-88514-01
32	Grid lever	グリッドオシダシレバー	501-92386
35	Spring	レバーバネ	501-56869-01
36	Grid stopper unit	グリッドストッパブ	501-56870-03
38	Pulley	Vプーリ	501-46780-02
39	Pulley shaft	プーリジク	501-46781-01
40	Nut plate	ネジイタ	501-56875
44	Servo-motor, ESA-1NS, 1/30	サーボモータ	077-50411-01
46	Motor base	モータトリツケイタ	501-92351
47	Nut plate	ネジイタ	501-57615
51	Insulate cloth	ゼツエンヌノ	501-56876
52	Pulley	Vプーリ	501-46783-01
54	Belt, MB410	ポリウレタンVベルト	500-07204-02
55	Belt fix plate	ベルトオサエ	501-56871
62	Spring	バ　ネ	501-46788
63	Micro switch, V-106-1A4	マイクロスイッチ	064-32230
67	Micro switch plate	マイクロスイッチトリツケダイ	501-92352
72	Micro switch plate	マイクロスイッチトリツケダイ	501-92354
76	Relay HG-3	リレー	500-03737-08
78	Fix plate	コンデンサコテイカナグ	501-56877
80	Bearing, SS5-16ZZ	ベアリング	031-25329

3	Bearing adjuster plate	ベアリングチョウセイバン	501-56881
3	Spacer	ダイイタ	501-92353
1	X-ray grid (828-038W100) (BF-10)	X－ray ヨウグリッド	500-06164-03
5	Terminal board, 6P	タンシバン	071-30006
)	Cover plate (BF-10)	カバー	501-58944
1	X-ray grid (834-039Al150) (BF-11 (BR-1, BR-10)	X－ray ヨウグリッド (Al インタースペーサ, 34line/cm)	500-06181-04
3	X-ray grid (828-038W150) (BF-11 (BR-10)	X－ray ヨウグリッド (Woodインタースペーサ, 28line/cm)	500-06164-04
2	Tray positioning plate	トレイイチギメバン	501-92358
3	Nut plate	イタ	501-92359
5	Shaft	イチギメジク	501-92360
)	Knob	ツマミ	501-37341
)	Positioner	イチギメカナグ	501-92361
2	Spring	アッシュクバネ	501-92362
5	Bearing shaft	ベアリングジク	501-95690-01
7	Bearing shaft	ベアリングジク	501-95690-02
)	Grid frame stopper	ストッパー	501-98640

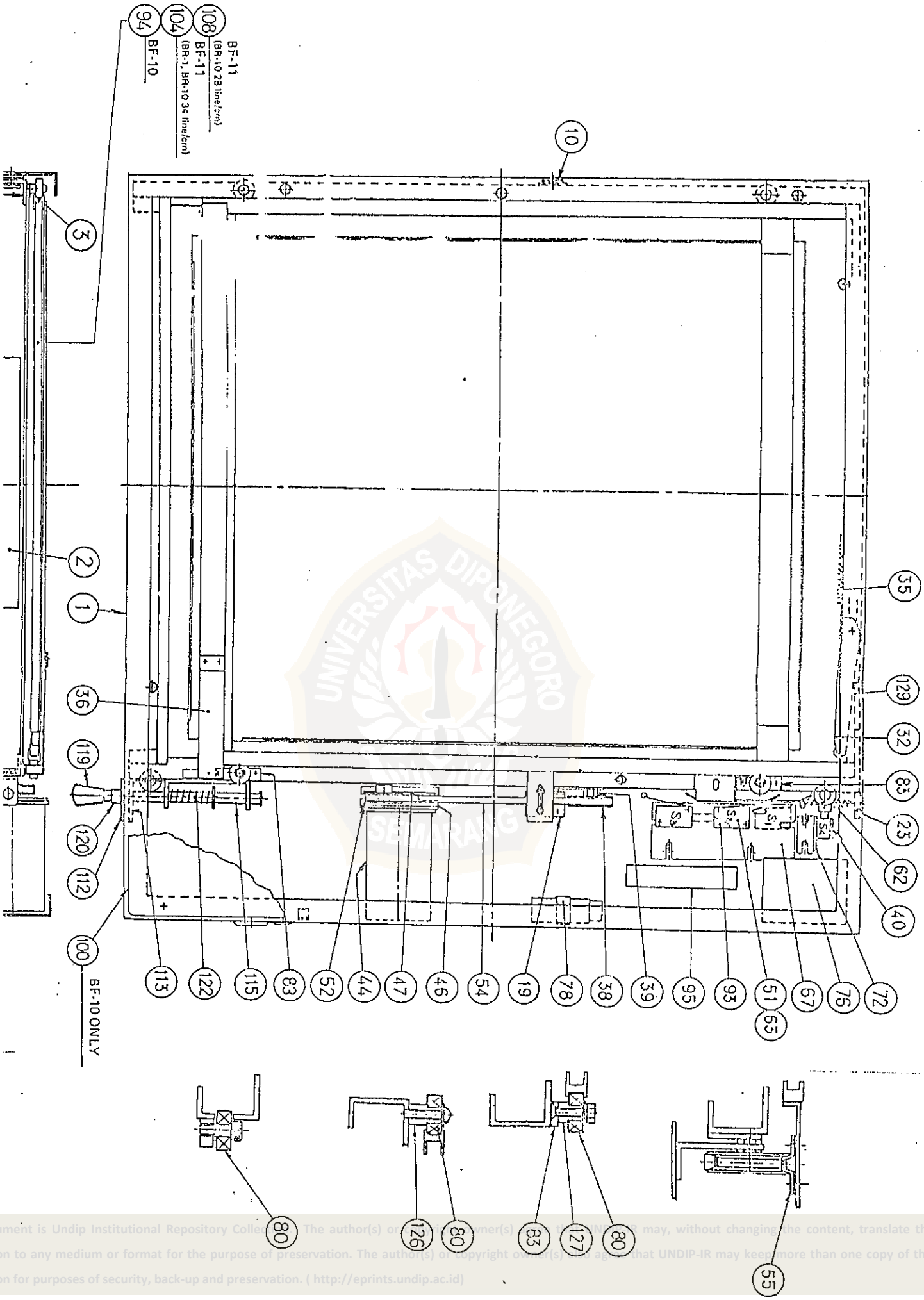

(Tray unit	トレイブ)	501-93379

Ref No.	Description		Part No.
1	Tray	ウケイタ	501-93380
2	Main lever	シュレバー	509-61303
4	Lever	レバー	509-61304
5	Shoe plate	スベリイタ	509-61305
6	Shoe plate	スベリイタ	509-61306
7	Cassette support	カセッテウケ	509-61307-01
8	Cassette support	カセッテウケ	509-61307-02
9	Shaft	ジ ク	501-98357
11	Stopper (front)	トレイアタリイタ	501-92389
12	Shoe	ガイドイタ	501-94211-03
13	Stopper plate	ブレーキダイ	509-61311-01
14	Spring	バ ネ	509-61312
15	Plate	アオヤキバネ	509-61313
16	Shoe	シュー	509-61314
17	Shaft	ウケガネ	509-61315
18	Stopper plate	ブレーキイタ	509-61316
19	Spring	オシバネ	509-61317
21	Handle	ハシュ	501-51728
24	Stopper	バネイタ	509-61301
26	Shaft	シュレバーヨウジク	501-57543
27	Handle	ツマミ	501-59392
29	Plate	スペーサ	501-84793-01
30	Plate	スペーサ	501-84793-02
34	Shoe	カクガタシュー	501-98358
35	Shaft	シュレバーヨウジク	501-57543-01
37	Bearing, DR-22-B5R	ベアリング	030-88516-01
38	Bearing base	ベアリングダイ	503-22655

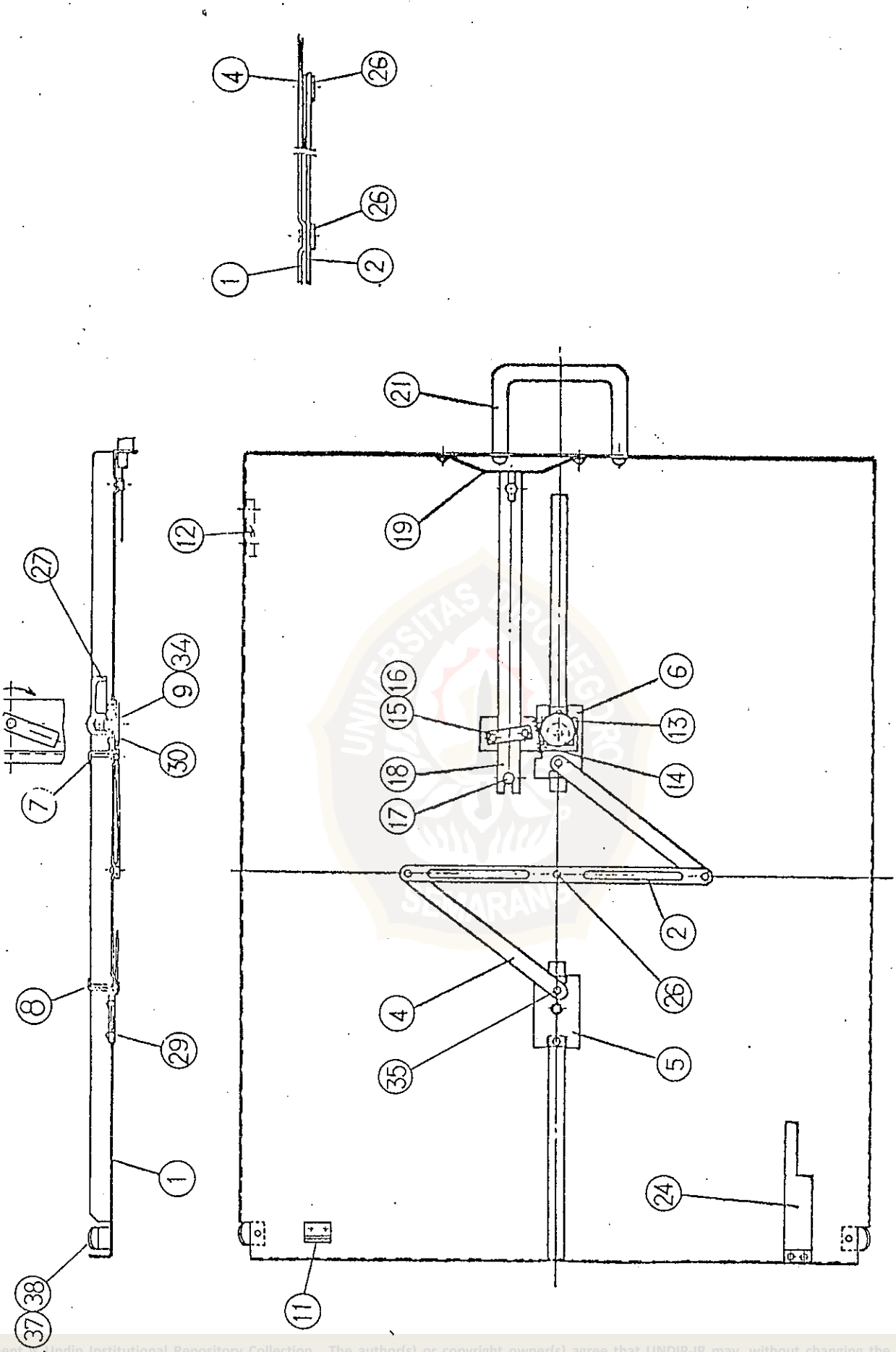

BF-10, 11

CONNECTION DIAGRAM

接　続　図

BF-10, BF-11

CONNECTION DIAGRAM

接　続　図

SHIMADZU CORPORATION

KYOTO　　JAPAN

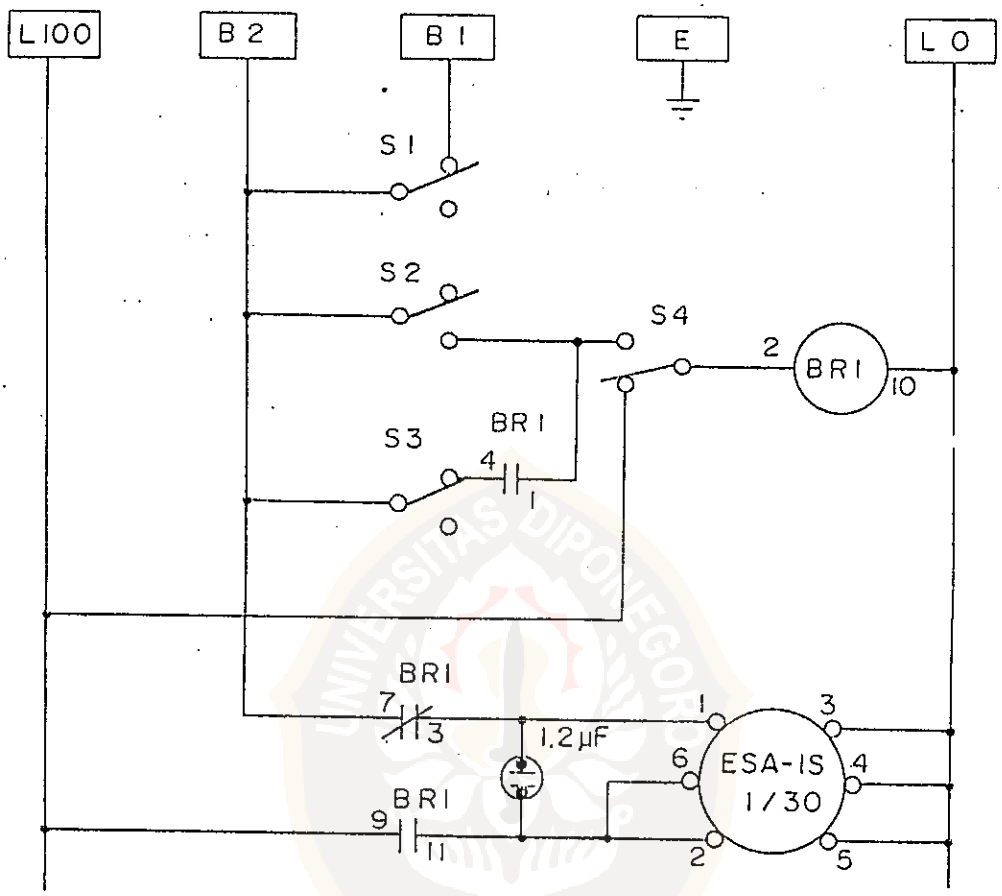

WIRING DIAGRAM
501-05426 E