LAMPIRAN A

DAFTAR KOMPONEN DAN PROPERTI PROGRAM EQUALIZE

DIAGRAM ALIR PROGRAM EQUALIZE

LISTING PROGRAM EQUALIZE

This document is Undip Institutional Repository Collection. The author(s) or copyright owner(s) agree that UNDIP-IR may, without changing the content, translate the submission to any medium or format for the purpose of preservation. The author(s) or copyright owner(s) also agree that UNDIP-IR may keep more than one copy of this submission for purposes of security, back-up and preservation. (http://eprints.undip.ac.id)

DAFTAR KOMPONEN DAN PROPERTI
PROGRAM EQUALIZE.EXE

KOMPONEN	PROPERTI	ISI
Label	Caption Name	Warna Label1
Edit	Name Text	Edit1 dikosongkan
Memo	Name Name	Memo1 Memo2
Timer	Name Even Ontimer	Timer1 Timer1Timer
Dialog	Name Name Name	Open Dialog1 Save Dialog1 Print Dialog1
Main Menu	Name	Main Menu1

This document is Undip Institutional Repository Collection. The author(s) or copyright owner(s) agree that UNDIP-IR may, without changing the content, translate the submission to any medium or format for the purpose of preservation. The author(s) or copyright owner(s) also agree that UNDIP-IR may keep more than one copy of this submission for purposes of security, back-up and preservation. (http://eprints.undip.ac.id)

DIAGRAM ALIR
PROGRAM EQUALIZE

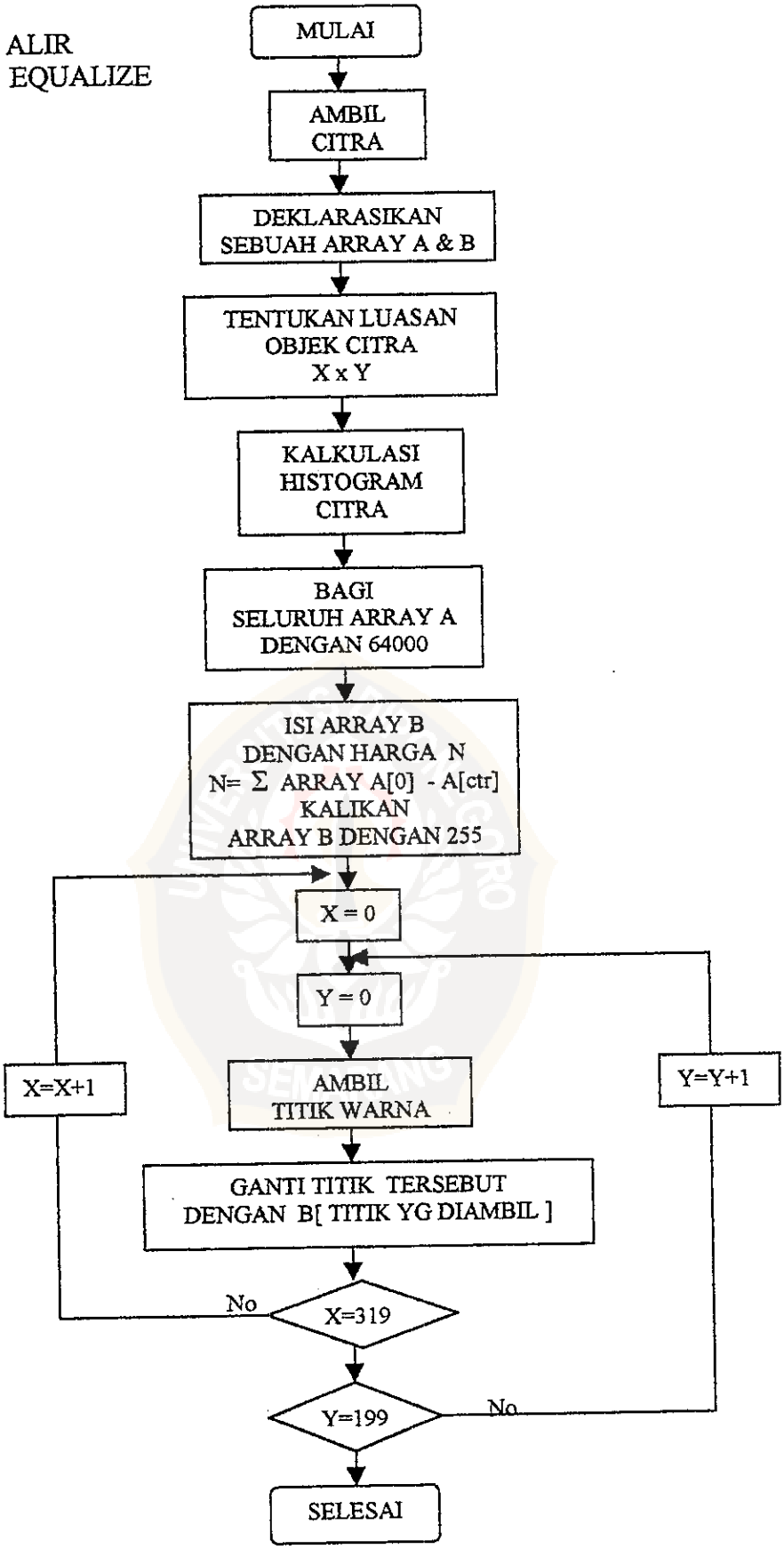

This document is Undip Institutional Repository Collection. The author(s) or copyright owner(s) agree that UNDIP-IR may, without changing the content, translate the submission to any medium or format for the purpose of preservation. The author(s) or copyright owner(s) also agree that UNDIP-IR may keep more than one copy of this submission for purposes of security, back-up and preservation. (http://eprints.undip.ac.id)

LISTING PROGRAM EQUALIZE

```
Unit unequalize;

Interface

Uses
      Windows, Messages, SysUtils, Classes, Graphics, Controls, Forms,
      Dialogs, StdCtrls, ComCtrls, ExtCtrls, OleCtrls, JPEG, Menus,
      Printers;

Type
      TfUtama = class(TForm)
      OpDlg: TopenDialog;
      ProgressBar1: TProgressBar;
      Timer1: TTimer;
      Memo1: TMemo;
      Label1: TLabel;
      Edit1: TEdit;
      MainMenu1 : TMainMenu;
      File1: TmenuItem;
      OpenFile1 : TmenuItem;
      Saveas1 : TmenuItem;
      N1 : TmenuItem;
      PrintFile1 : TmenuItem;
      Action1 : TmenuItem;
      Exit1 : TmenuItem;
      PrintDialog1 : TprintDialog;
      SvDlg : TsaveDialog;
      ProsesGambar1 : TmenuItem;
      HapusGambar1 : TmenuItem;
      PrinterSet : TprintSetupDialog;
      Memo2 : Tmemo;
      CalculateHistogram1 : TmenuItem;

      Procedure FormClose(Sender: Tobject; var Action : TcloseAction);
      Procedure Timer1Timer(Sender: Tobject);
      Procedure FormActivate(Sender: Tobject);
      Procedure OpenfileClick(Sender: Tobject);
      Procedure Saveas1Click(Sender: Tobject);
      Procedure Exit1Click(Sender: Tobject);
      Procedure PrintfileClick(Sender: Tobject);
      Procedure FormPaint(Sender: Tobject);
      Procedure ProsesGambar1Click(Sender: Tobject);
      Procedure HapusGambar1Click(Sender: TObject);
      Procedure CalculateHistogram1Click(Sender: Tobject);

 Private

 { Private declarations }
 Public
 { Public declarations }
 end;
```

This Document is Undip Institutional Repository Collection. The author(s) or copyright owner(s) agree that UNDIP-IR may, without changing the content, translate the submission to any medium or format for the purpose of preservation. The author(s) or copyright owner(s) also agree that UNDIP-IR may keep more than one copy of this submission for purposes of security, back-up and preservation. (http://eprints.undip.ac.id)

```
Var
    Futama: Tutama;
    Hist,Temp1 : array[0..255] of real;
    BufBmp : Tbitmap;
    Jpegimg : TjpegImage;
    Kemajuan : integer;
    Fileout : text;
    Persentasi : real;
    LebarBmp : integer;
    TinggiBmp : integer;
    BolehRepaint : boolean;


Implementation

    { $R *.DFM }

procedure calculateimagehistogram;
Var
    X,y,KonstantaWarna : integer;
    Isipixel : string;

Begin
    For x:=0 to 255 do
        Hist[x]:=0;

    For x:=0 to lebarbmp-1 do
        For y:=0 to tinggibmp-1 do
            Begin
            Aplication.ProcessMessages;
            KonstantaWarna:=((BufBmp.canvas.pixel[x,y]  AND $FF0000)
             div $10000);

            KonstantaWarna:=round(KonstantaWarna*persentasi);
            Hist[konstantaWarna]:=hist[KonstantaWarna]+1;

            Kemajuan:=round(x*y/2);
            End;
End;

Procedure TfUtama.FormClose(Sender: Tobject);
Begin
BufBmp.free;
Jpegimg.free;
End;

Procedure TfUtama.Timer1Timer(Sender: Tobject);
begin
progressbar1.Position:=kemajuan;
end;

procedure TfUtama.FormActivate(Sender: Tobject);
begin
kemajuan:=0;
BolehRepaint:=false;
End;
```

This document is Undip Institutional Repository Collection. The author(s) or copyright owner(s) agree that UNDIP-IR may, without changing the content, translate the submission to any medium or format for the purpose of preservation. The author(s) or copyright owner(s) also agree that UNDIP-IR may keep more than one copy of this submission for purposes of security, back-up and preservation. (http://eprints.undip.ac.id)

```
Procedure TfUtama.OpenfileClick(Sender: Tobject);
Var
    SPathFile : string;
Begin
BolehRepaint:=true;
Jpegimg:=tjpegimage.create;
//jpegimg.Width:=200;
//jepgimg.Height:=320;
BufBmp:= TBitmap.Create;
BufBmp.Height:=round(ClientHiegth*1);
BufBmp.Width:=round(ClientWidth*1);
Jpegimg.Grayscale:=true;
BufBmp.Monochome:=true;
OpDlg.Execute;
SPathFile:= OpDlg.FileName;
If length(trim(spathfile))<3 then exit;
If Pos('.JPG',uppercase(spathfile))>0 then
   Begin
   Jpegimg.LoadFromFile(spathFile);
   Bufbmp.Assign(jpegimg);
   End
   Else
   BufBmp.LoadFromFile(spathFile);
   Tinggibmp:=bufbmp.Height:
   Lebarbmp:=bufbmp.Width;


//BitBlt(Canvas.handle,0,0,lebarbmp,tinggibmp,BufBmp.Canvas.handle,0,0
,SRCCOPY);
Canvas.CopyRect(rect(0,0,lebarbmp,tinggibmp),bufBmp.Canvas,rect(0,0,le
barbmp,tinggibmp));
end;

procedure TfUtama.Saveas1Click(Sender: Tobject);
var
    sPathFile : string;
begin
SvDlg.Execute;
sPathFile := SvDlg.FileName;
bufbmp.SaveToFile(spathFile);

end;

procedure TfUtama.Exit1Click(Sender: Tobject);
begin
application.Terminate;
end;

procedure TfUtama.Printfile1Click(Sender: Tobject);
if  printdialog.Execute then
begin
printer.BeginDoc:
if printer.Printing+true then
printer.Canvas.CopyRect(rect,0,0,lebarbmp,tinggibmp),bufbmp.Canvas,
rect(0,0,lebarbmp,tinggibmp),printer.EndDoc;
```

This document is Undip Institutional Repository Collection. The author(s) or copyright owner(s) agree that UNDIP-IR may, without changing the content, translate the submission to any medium or format for the purpose of preservation. The author(s) or copyright owner(s) also agree that UNDIP-IR may keep more than one copy of this submission for purposes of security, back-up and preservation. (http://eprints.undip.ac.id)

```
end;

end;

procedure TfUtama.FormPaint(Sender: Tobject);
begin
if BolehRepaint=true then
Canvas.CopyRect(Rect(0,0,lebarbmp,tinggibmp),bufbmp.canvas,rect(0,0,
lebarbmp,Tinggibmp));
End;

Procedure TfUtama.ProsesGambar1Click(Sender: Tobject);
Var
   X,y : integer;
   Acc : real;
   Pix : byte;
   Pix1 : integer;

Begin
Kemajuan:=0;
Progressbar1.Position:=0;
Persentasi:= strtoint(edit1.text)/255;
Persentasi:=1-persentasi;
Calculateimagehistogram;
Memo2.clear;
Acc:=0;
For x:=0 to 255 do
    Begin
    Memo2.Lines.Add('warna'+inttostr(x)+':'+inttostr(round(hist[x])));
    End;

Acc:=0;
For x:=0 to 255 do
   Begin
   Acc:=Acc+Hist[x]/(tinggibmp*lebarbmp);
   Temp1[x]:=Acc*255;
         If temp1[x]>255 then Temp1[x]:=255;
         End;
Progressbar1.Max:=tinggibmp*lebarbmp;
For x:=0 to lebarbmp-1 do
    For y:=0 to tinggibmp-1 do


         Begin
         Application.ProsessMessages;
         Pix:=round((bufbmp.canvas.pixels[x,y] and $FF0000)
         div $10000);
         Pix1:=round(temp[pix]));
         Pix1:=(pix1)+(pix1*$100)+(pix1*$10000);

//bufbmp.Canvas.Pixels[x,y]:=RGB(round(temp1[pix]),round(temp1[pix]),r
ound(temp1[pix]),bufbmp.canvas.Pixels[x,y]:=pix1;

        kemajuan:=round((tinggibmp*lebarbmp /2)+(x*y/2));
        end;
```

This document is Undip Institutional Repository Collection. The author(s) or copyright owner(s) agree that UNDIP-IR may, without changing the content, translate the submission to any medium or format for the purpose of preservation. The author(s) or copyright owner(s) also agree that UNDIP-IR may keep more than one copy of this submission for purposes of security, back-up and preservation. (http://eprints.undip.ac.id)

```
BitBlt(Canvas.handle,0,0,lebarbmp,tinggibmp,buf.canvas.handle,0,0,
SRCCOPY);
Assignfile(fileout,'c:\histogram.txt');
Rewrite(fileout);
    For x:=0  to  255 do
        Writeln(fileout,'warna ke'+inttostr(x)+': '+inttostr(round
        (hist[x])));
        Closefile(fileout);
        memo1.Clear;
        memo1Lines.LoadFromFile(c':\histogram.txt');

end;


procedure TfUtama.HapusGambar1Click(Sender: Tobject);
var
   brush : Tbrush;
begin
brush:=Tbrush.Create;
brush.Bitmap:=Tbitmap.Create;
brush.Style:= bsClear;
brush.color:=clBtnFace;
canvas.Brush.Assign(brush);
canvas.Ractangle90,0,clientwidth,clientheight);
end;

procedure TfUtama.Calculateimagehistogram1Click(Sender: Tobject);
var
   x,y,konstantaWarna : integer;
   isipixels : string;
   pix : byte;

begin
kenajuan:=0;
ProgressBar1.Position:=0;
Persentasi:=1-persentasi;
For x:=0 to 255 do
    Hist[x]:=0;

ProgressBar1.Max:=tinggibmp*lebarbmp;
For x:=0 to lebarbmp-1 do
    For y:=0 to tinggibmp-1 do
        Begin
        Aplication.ProcessMessages;
        KonstantaWarna:=( (BufBmp.canvas.pixel[x,y] AND $FF0000)
         div $10000);
        KonstantaWarna:=round(KonstantaWarna*persentasi);
        Hist[konstantaWarna]:=hist[KonstantaWarna]+1;
        Kemajuan:=round((tinggibmp*lebarbmp /2) + (x*y/2));
        End;

BitBlt(Canvas.handle,0,0,lebarbmp,tinggibmp,buf.canvas.handle,0,0,
SRCCOPY);
Assignfile(fileout,'c:\histogram.txt');
Rewrite(fileout);
```

This document is Undip Institutional Repository Collection. The author(s) or copyright owner(s) agree that UNDIP-IR may, without changing the content, translate the submission to any medium or format for the purpose of preservation. The author(s) or copyright owner(s) also agree that UNDIP-IR may keep more than one copy of this submission for purposes of security, back-up and preservation. (http://eprints.undip.ac.id)

```
For x:=0  to  255 do
Writeln(fileout,'warna ke'+inttostr(x)+': '+inttostr(round(hist[x])));
Closefile(fileout);
memo1Lines.LoadFromFile(c':\histogram.txt');
end;

end.
```

This document is Undip Institutional Repository Collection. The author(s) or copyright owner(s) agree that UNDIP-IR may, without changing the content, translate the submission to any medium or format for the purpose of preservation. The author(s) or copyright owner(s) also agree that UNDIP-IR may keep more than one copy of this submission for purposes of security, back-up and preservation. (http://eprints.undip.ac.id)

LAMPIRAN B

CITRA :

Tumit.bmp
Tumit Plus.bmp
Cateter.bmp
Cateter Plus.bmp
Vena.bmp
Vena Plus.bmp

This document is Undip Institutional Repository Collection. The author(s) or copyright owner(s) agree that UNDIP-IR may, without changing the content, translate the submission to any medium or format for the purpose of preservation. The author(s) or copyright owner(s) also agree that UNDIP-IR may keep more than one copy of this submission for purposes of security, back-up and preservation. (http://eprints.undip.ac.id)

CITRA
Tumit.bmp

CITRA
TumitPlus.bmp

This document is Undip Institutional Repository Collection. The author(s) or copyright owner(s) agree that UNDIP-IR may, without changing the content, translate the submission to any medium or format for the purpose of preservation. The author(s) or copyright owner(s) also agree that UNDIP-IR may keep more than one copy of this submission for purposes of security, back-up and preservation. (http://eprints.undip.ac.id)

CITRA
Cateter.bmp

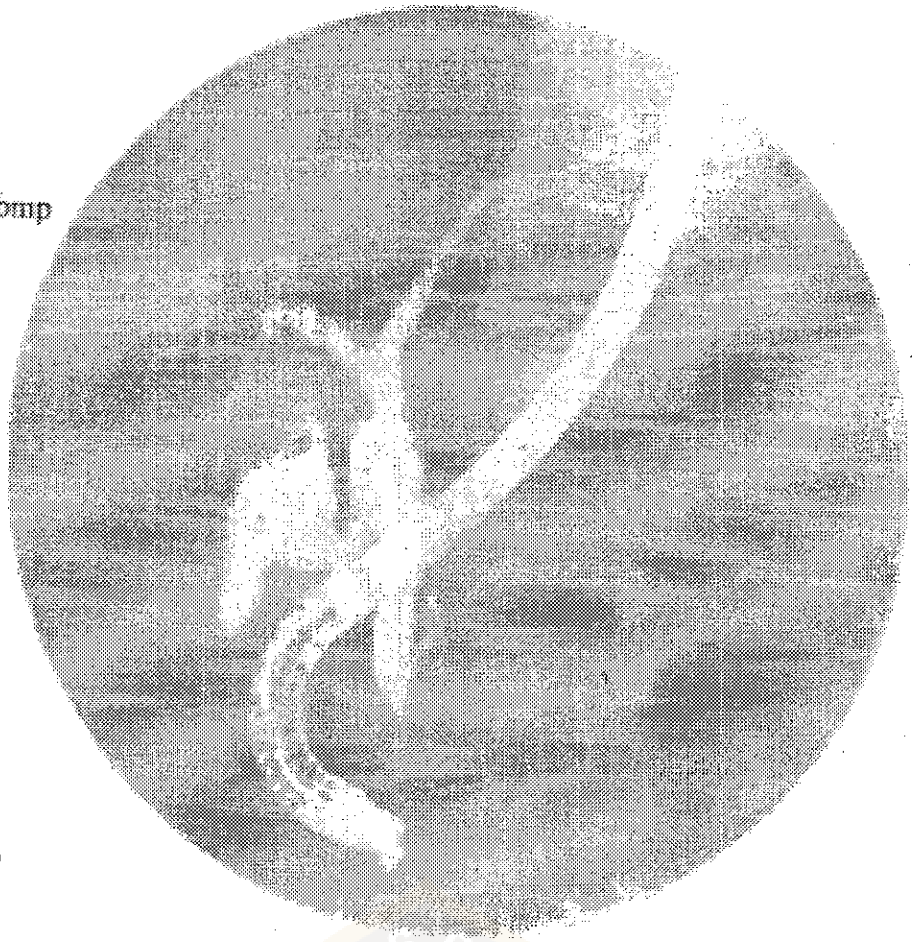

CITRA
CateterPlus.bmp

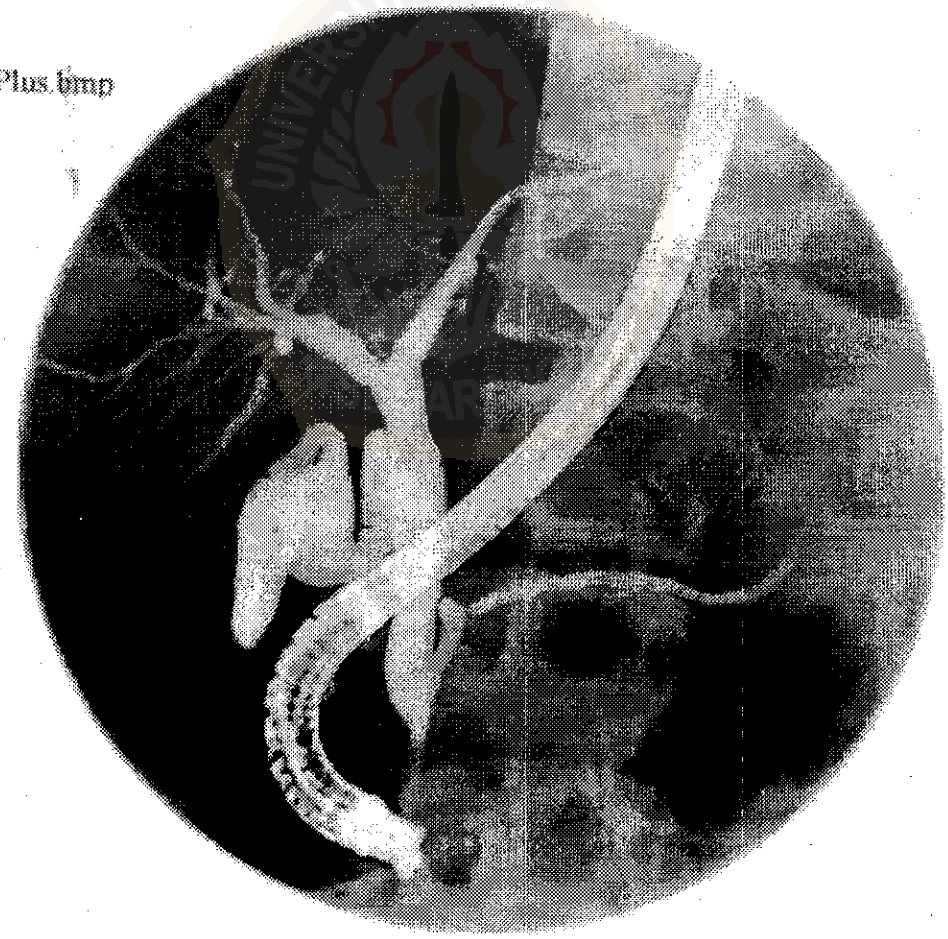

This document is Undip Institutional Repository Collection. The author(s) or copyright owner(s) agree that UNDIP-IR may, without changing the content, translate the submission to any medium or format for the purpose of preservation. The author(s) or copyright owner(s) also agree that UNDIP-IR may keep more than one copy of this submission for purposes of security, back-up and preservation. (http://eprints.undip.ac.id)

CITRA
Vena.bmp

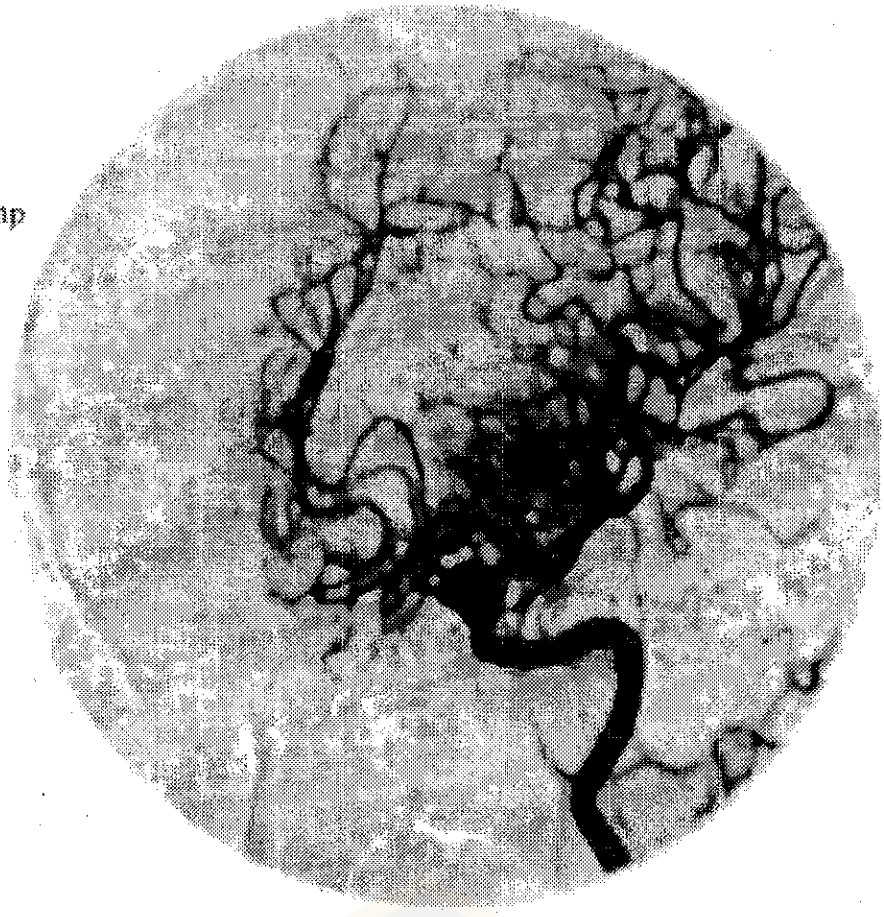

CITRA
VenaPlus.bmp

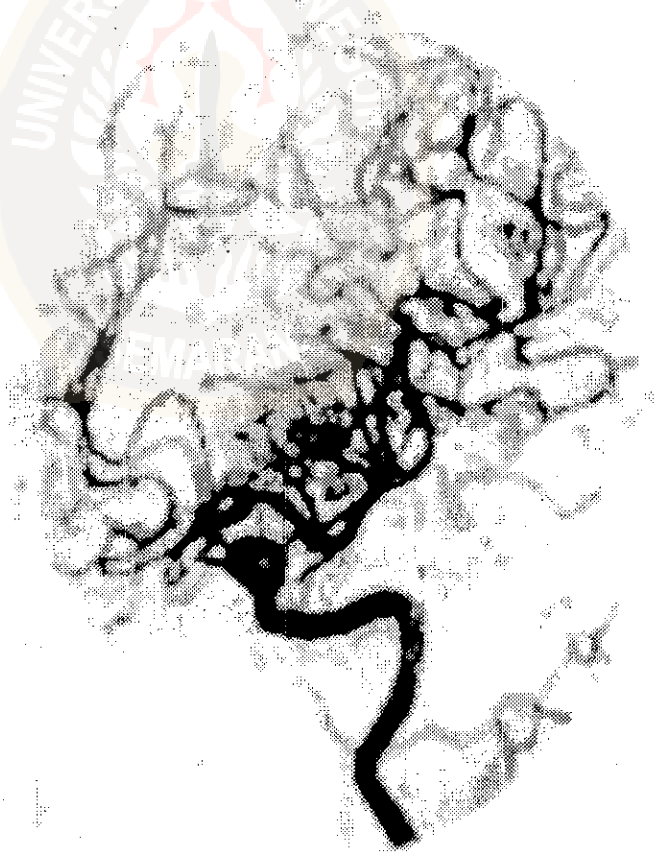

This document is Undip Institutional Repository Collection. The author(s) or copyright owner(s) agree that UNDIP-IR may, without changing the content, translate the submission to any medium or format for the purpose of preservation. The author(s) or copyright owner(s) also agree that UNDIP-IR may keep more than one copy of this submission for purposes of security, back-up and preservation. (http://eprints.undip.ac.id)

LAMPIRAN C

ILUSTRASI :

- TEKNIK PEMERIKSAAN FLUOROSKOPI
- PESAWAT FLUOROKOPI DIGITAL
- PESAWAT FLUOROKOPI SHIMADZU XUD150K

This document is Undip Institutional Repository Collection. The author(s) or copyright owner(s) agree that UNDIP-IR may, without changing the content, translate the submission to any medium or format for the purpose of preservation. The author(s) or copyright owner(s) also agree that UNDIP-IR may keep more than one copy of this submission for purposes of security, back-up and preservation. (http://eprints.undip.ac.id)

Teknik Pemeriksaan Pasien
Dengan Fluoroskopi

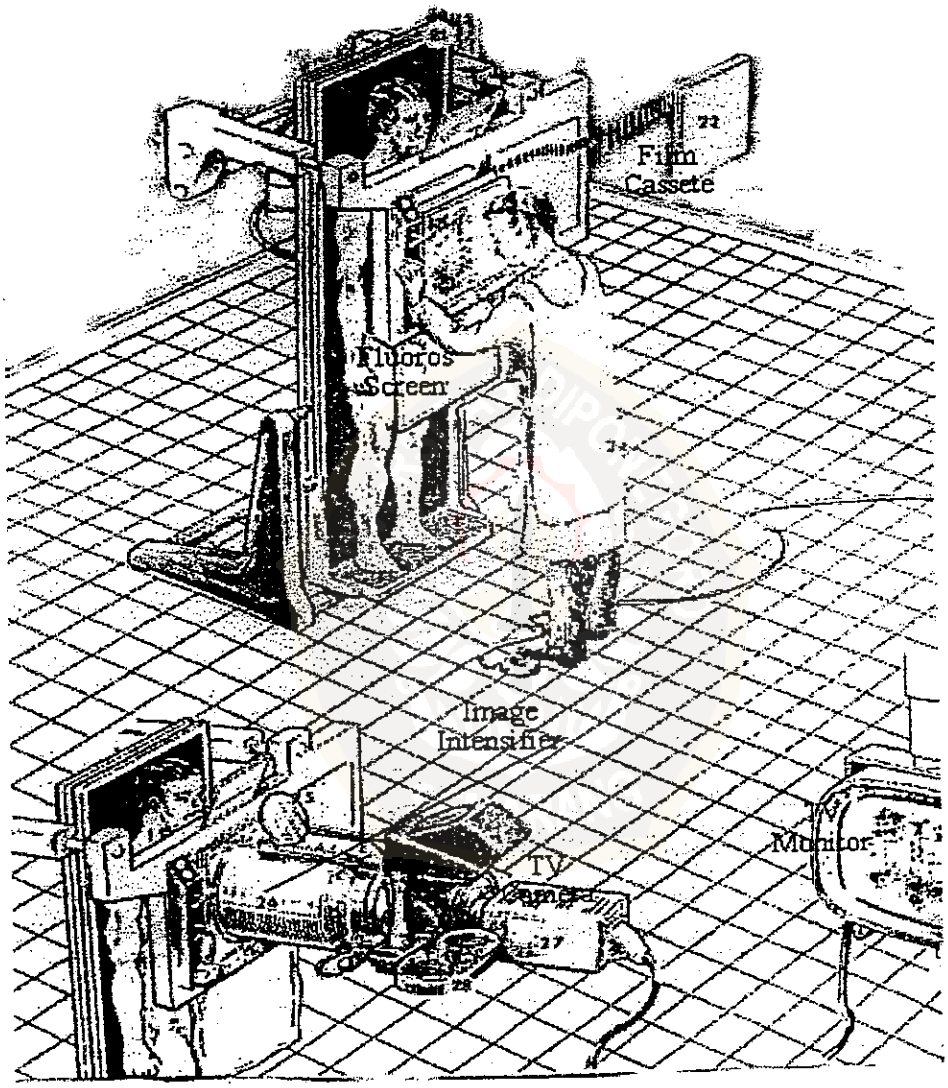

This document is Undip Institutional Repository Collection. The author(s) or copyright owner(s) agree that UNDIP-IR may, without changing the content, translate the submission to any medium or format for the purpose of preservation. The author(s) or copyright owner(s) also agree that UNDIP-IR may keep more than one copy of this submission for purposes of security, back-up and preservation. (http://eprints.undip.ac.id)

Pesawat Fluoroskopi Digital

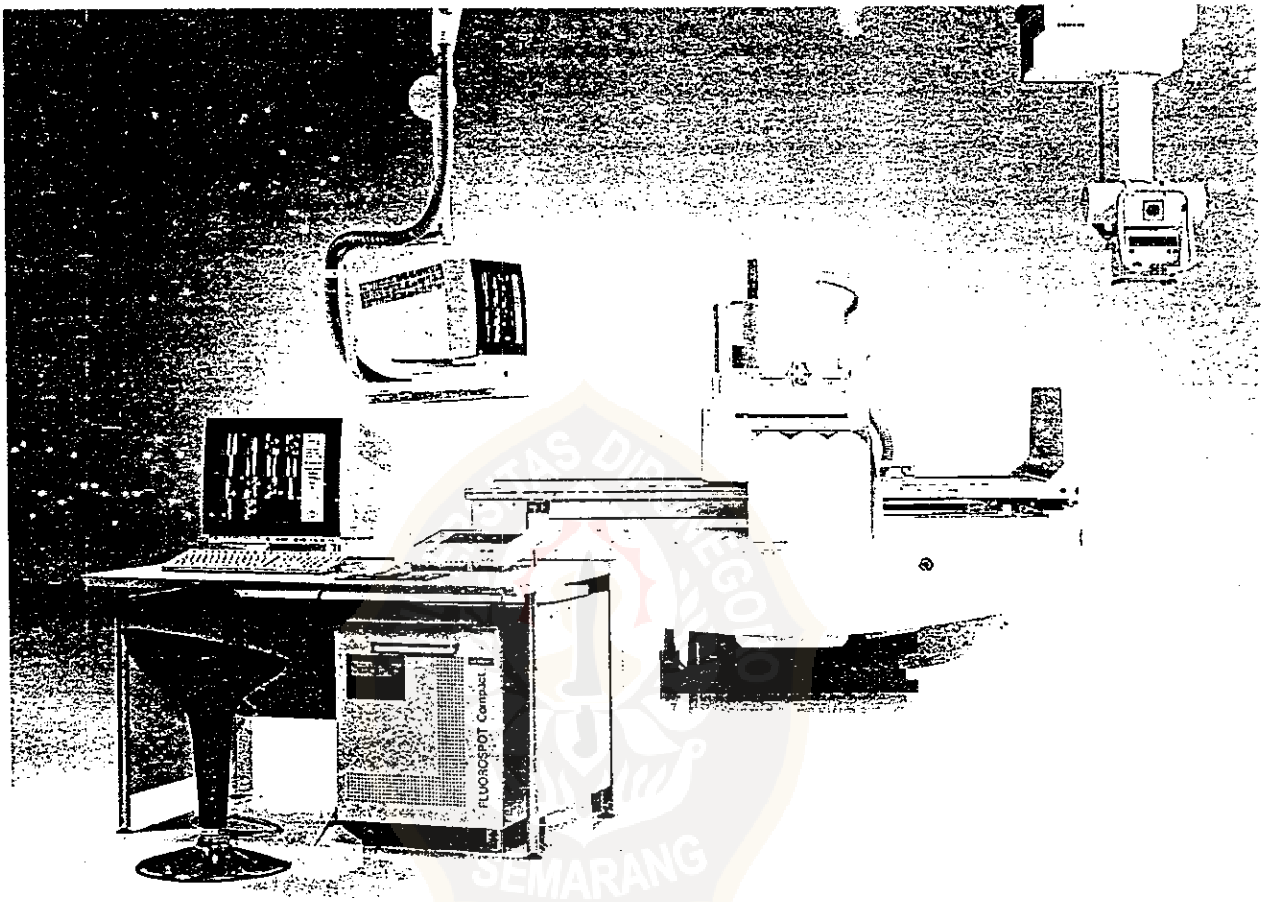

This document is Undip Institutional Repository Collection. The author(s) or copyright owner(s) agree that UNDIP-IR may, without changing the content, translate the submission to any medium or format for the purpose of preservation. The author(s) or copyright owner(s) also agree that UNDIP-IR may keep more than one copy of this submission for purposes of security, back-up and preservation. (http://eprints.undip.ac.id)

SITE PLAN PESAWAT SHIMADZU XUD150
PADA RUANG 11 INSTALASI RADIODIAGNOSTIK
RSUP DR KARIADI SEMARANG

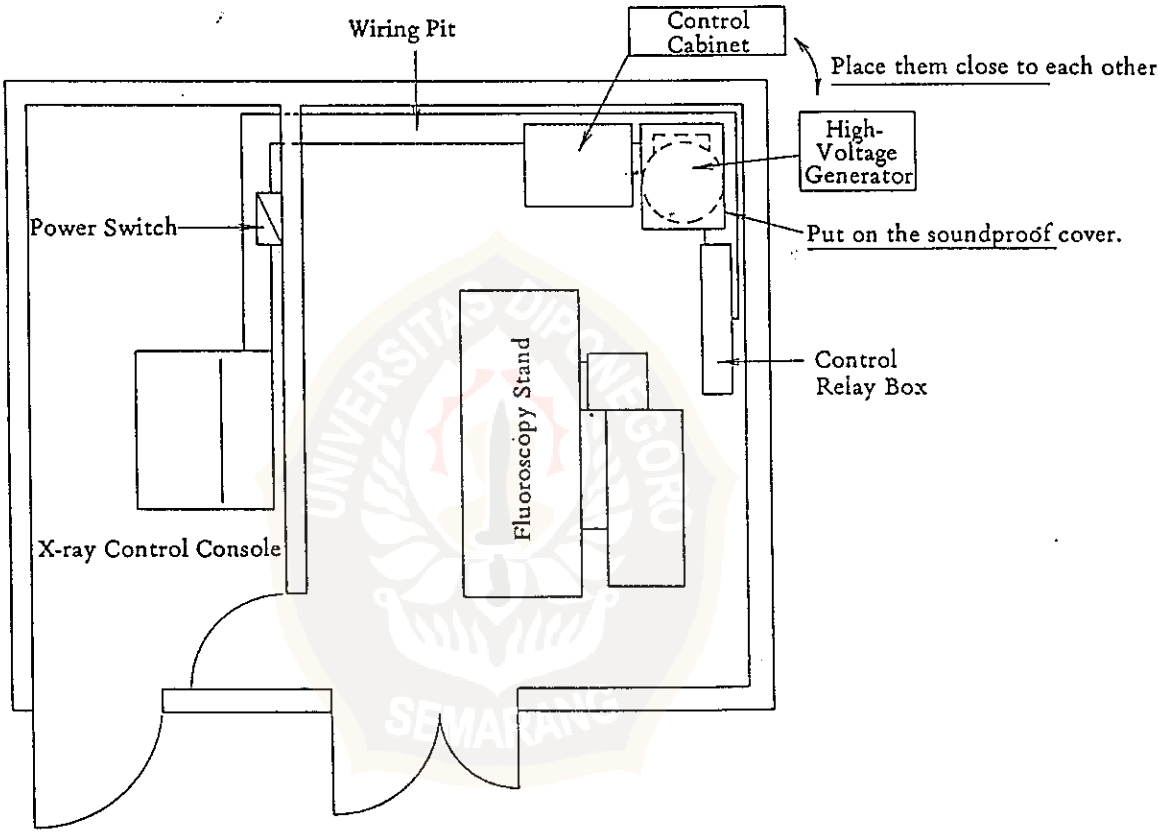

This document is Undip Institutional Repository Collection. The author(s) or copyright owner(s) agree that UNDIP-IR may, without changing the content, translate the submission to any medium or format for the purpose of preservation. The author(s) or copyright owner(s) also agree that UNDIP-IR may keep more than one copy of this submission for purposes of security, back-up and preservation. (http://eprints.undip.ac.id)

DISPLAY PADA MEJA KONTROL
PESAWAT SHIMADZU XUD150

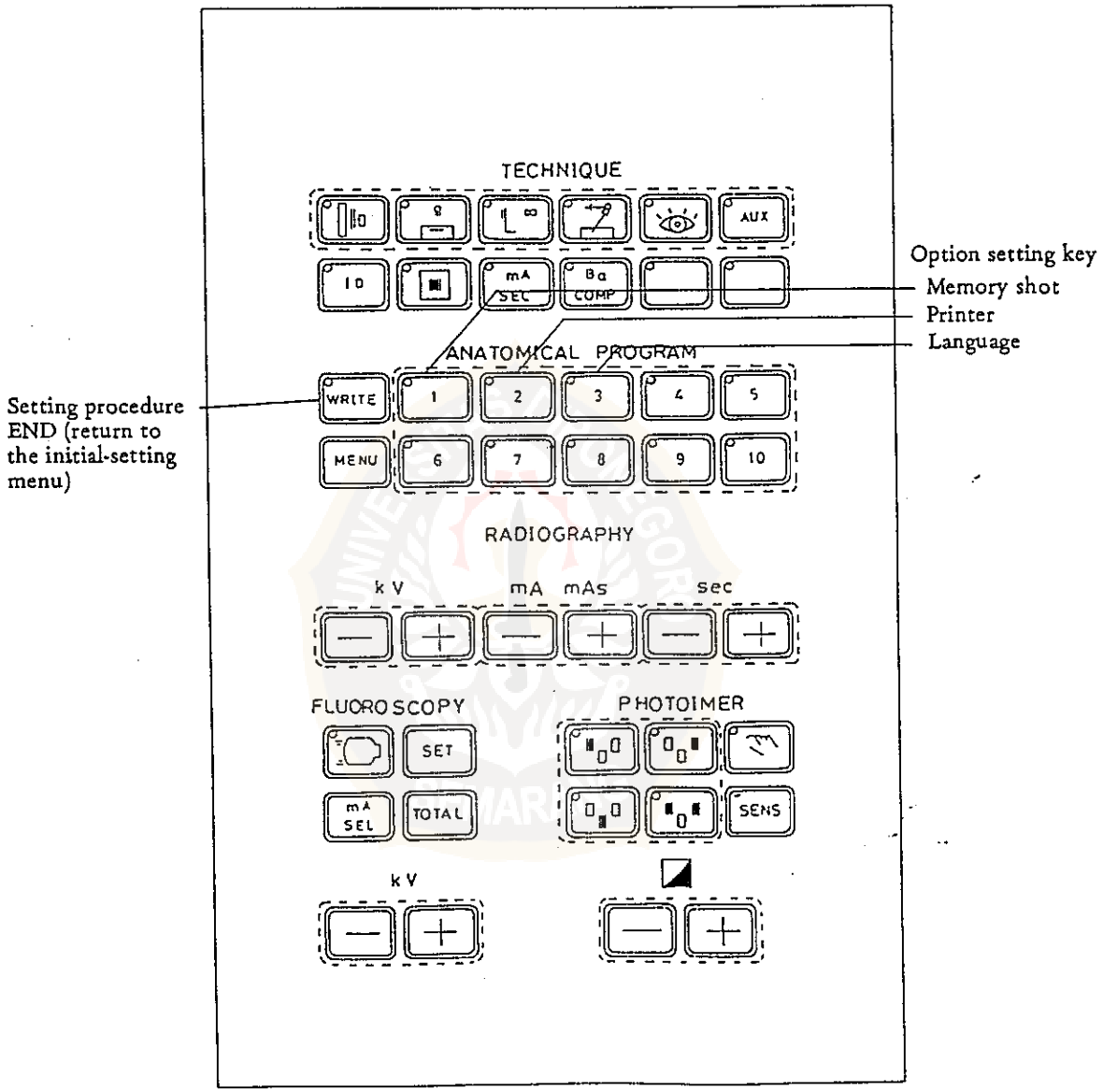

This document is Undip Institutional Repository Collection. The author(s) or copyright owner(s) agree that UNDIP-IR may, without changing the content, translate the submission to any medium or format for the purpose of preservation. The author(s) or copyright owner(s) also agree that UNDIP-IR may keep more than one copy of this submission for purposes of security, back-up and preservation. (http://eprints.undip.ac.id)

UD150B/K

When Option Mode is Executed

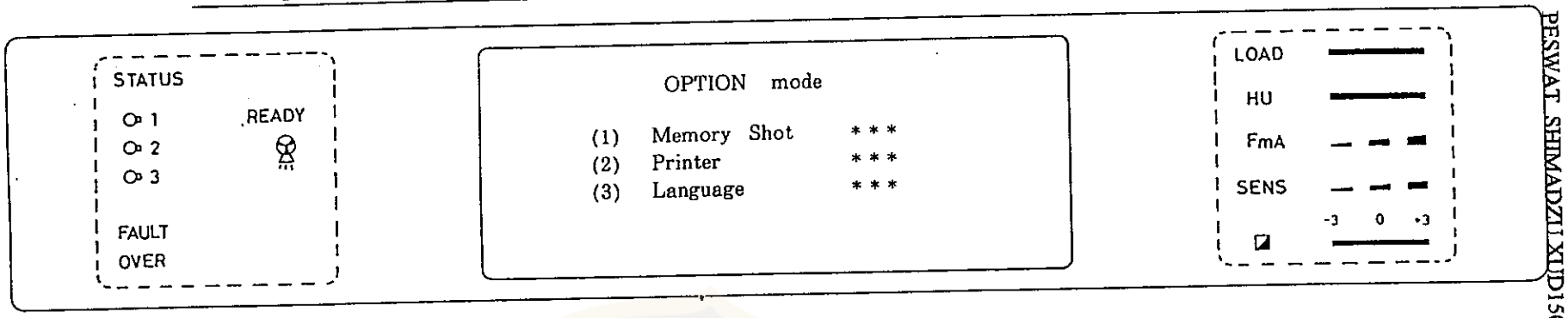

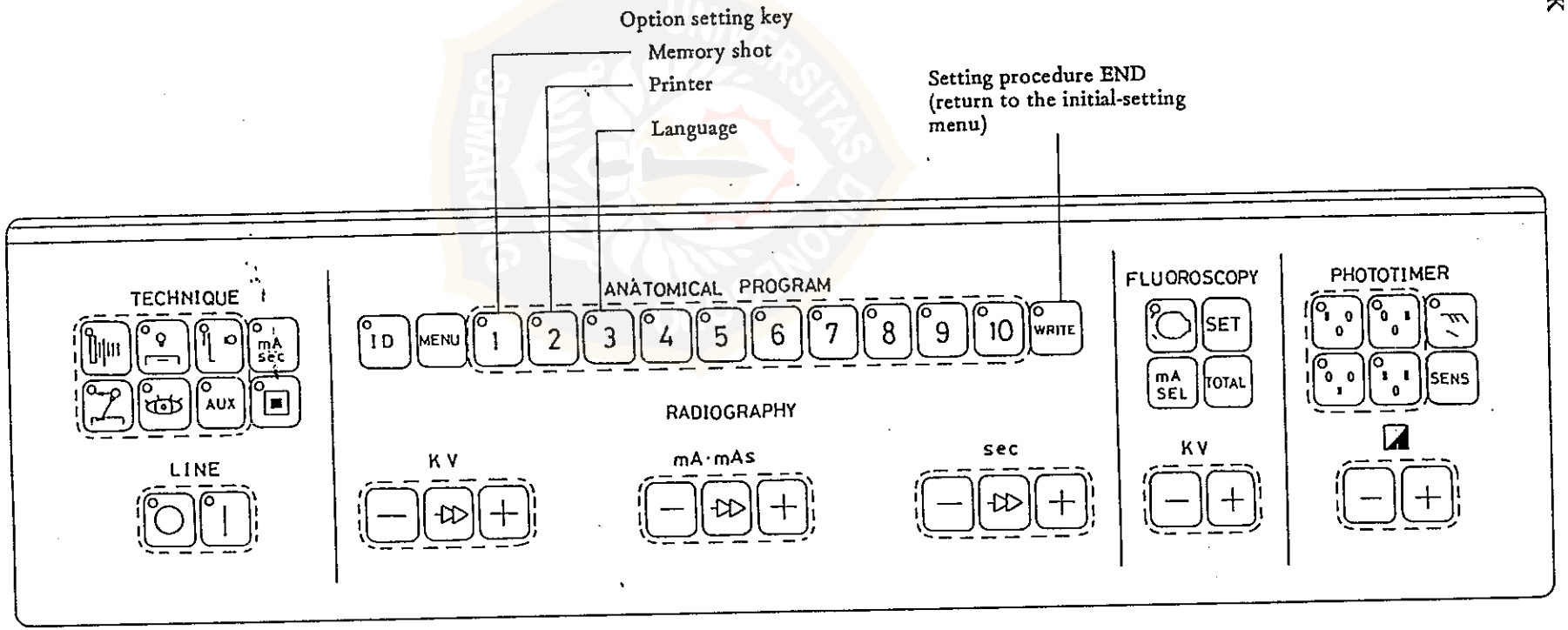

This document is Undip Institutional Repository Collection. The author(s) or copyright owner(s) agree that UNDIP-IR may, without changing the content, translate the submission to any medium or format for the purpose of preservation. The author(s) or copyright owner(s) also agree that UNDIP-IR may keep more than one copy of this submission for purposes of security, back-up and preservation. (http://eprints.undip.ac.id)

MEJA KONTROL
PESAWAT SHIMADZU XUD150K
(2) XSC-70

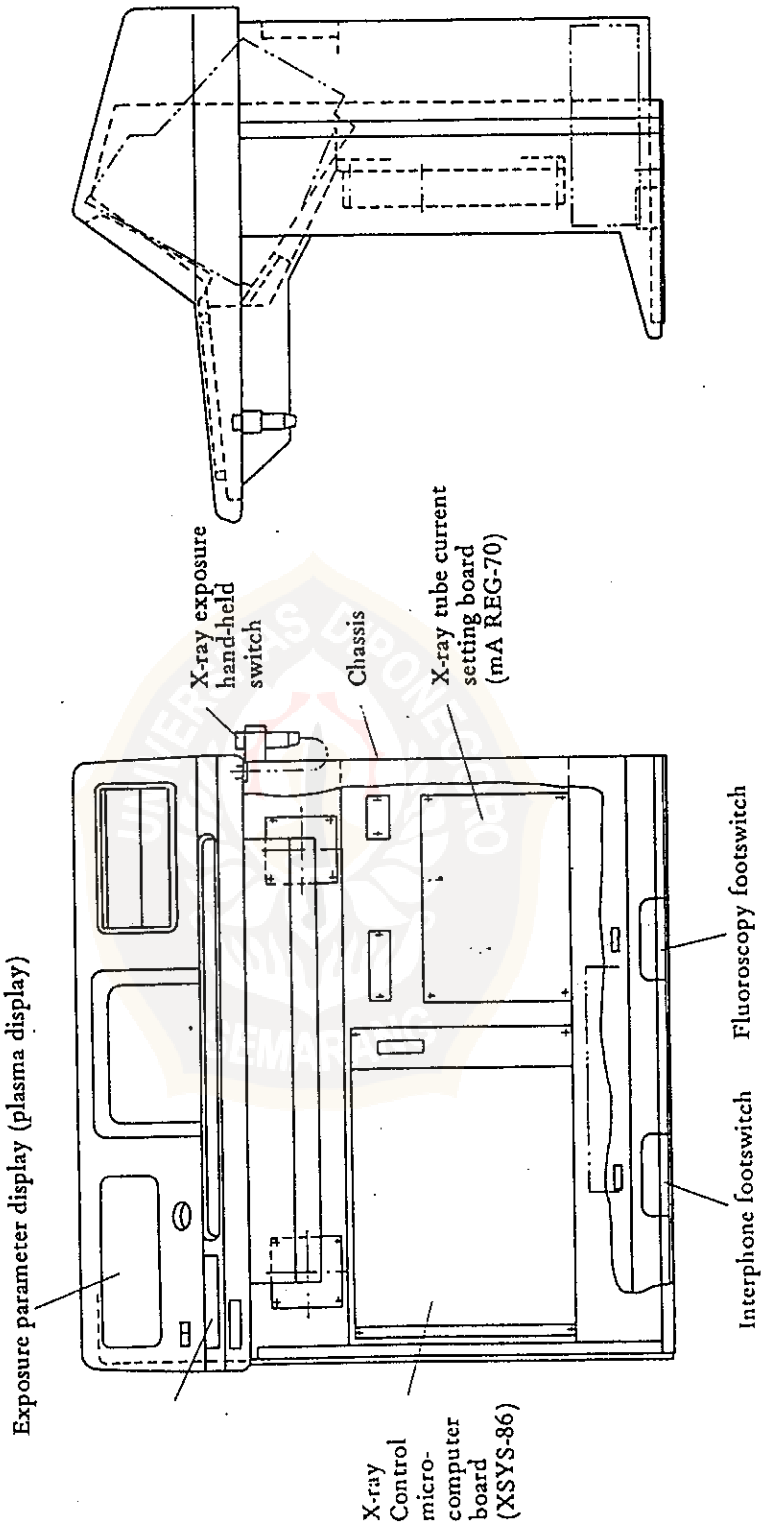

This document is Undip Institutional Repository Collection. The author(s) or copyright owner(s) agree that UNDIP-IR may, without changing the content, translate the submission to any medium or format for the purpose of preservation. The author(s) or copyright owner(s) also agree that UNDIP-IR may keep more than one copy of this submission for purposes of security, back-up and preservation. (http://eprints.undip.ac.id)

EXAMINATION TABEL
PESAWAT SHIMADZU XUD150

ARAH DEPAN

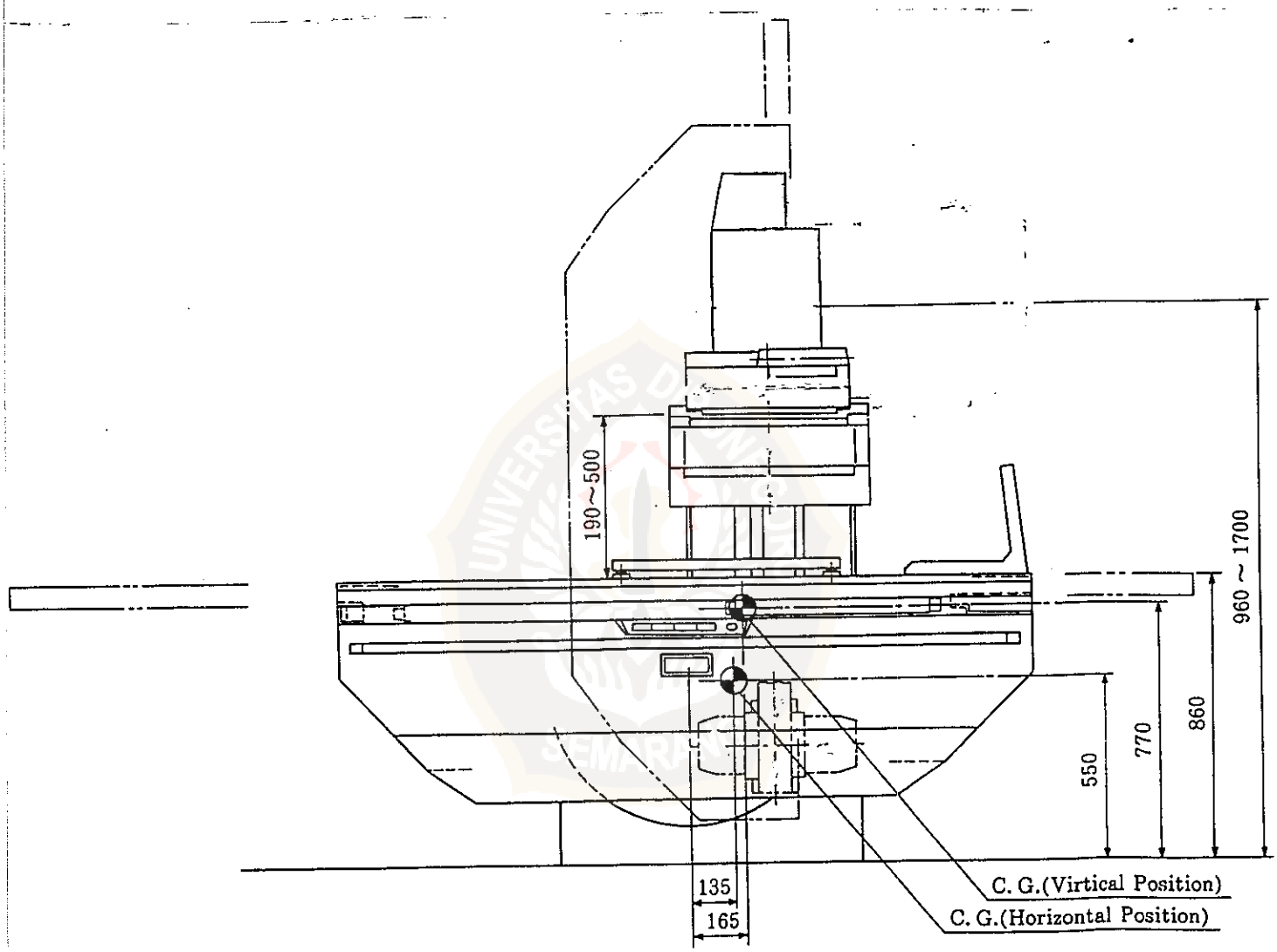

This document is Undip Institutional Repository Collection. The author(s) or copyright owner(s) agree that UNDIP-IR may, without changing the content, translate the submission to any medium or format for the purpose of preservation. The author(s) or copyright owner(s) also agree that UNDIP-IR may keep more than one copy of this submission for purposes of security, back-up and preservation. (http://eprints.undip.ac.id)

EXAMINATION TABEL
PESAWAT SHIMADZU XUD150

ARAH SAMPING KANAN

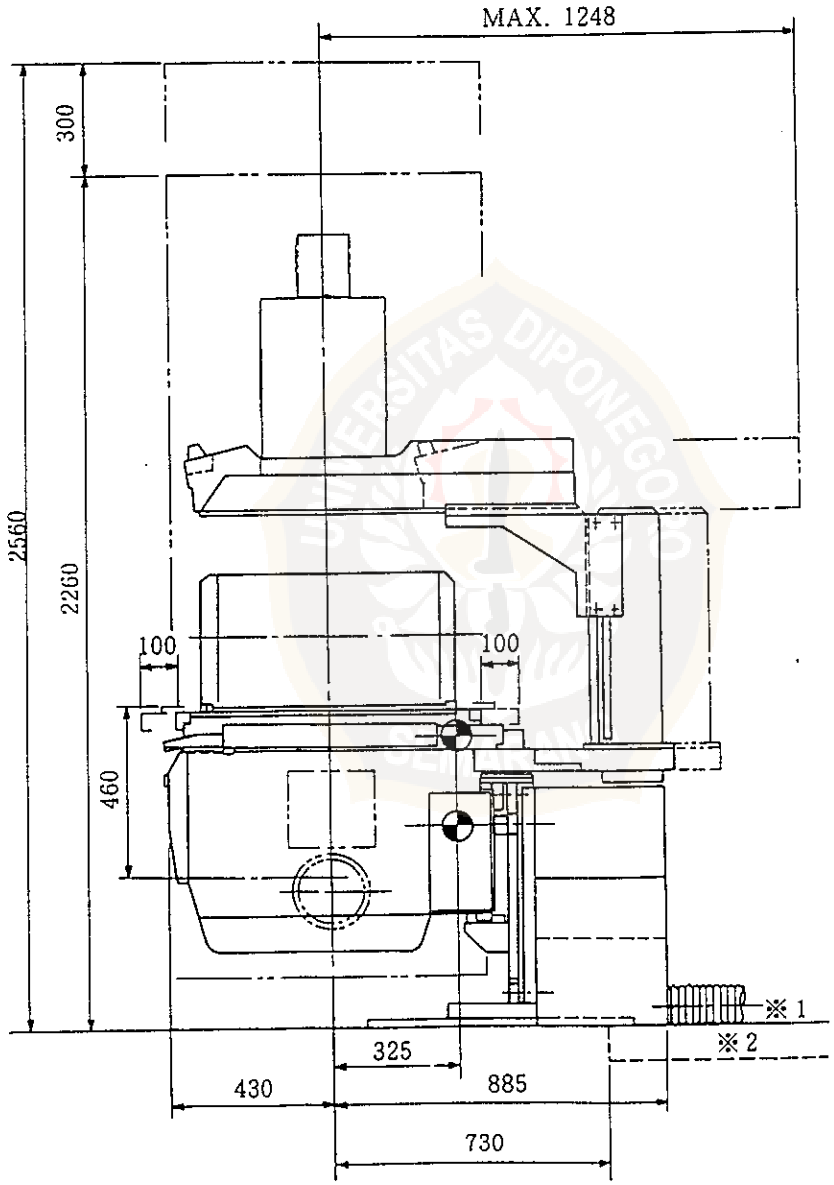

YSF-200

501-09574 C 1/20

This document is Undip Institutional Repository Collection. The author(s) or copyright owner(s) agree that UNDIP-IR may, without changing the content, translate the submission to any medium or format for the purpose of preservation. The author(s) or copyright owner(s) also agree that UNDIP-IR may keep more than one copy of this submission for purposes of security, back-up and preservation. (http://eprints.undip.ac.id)

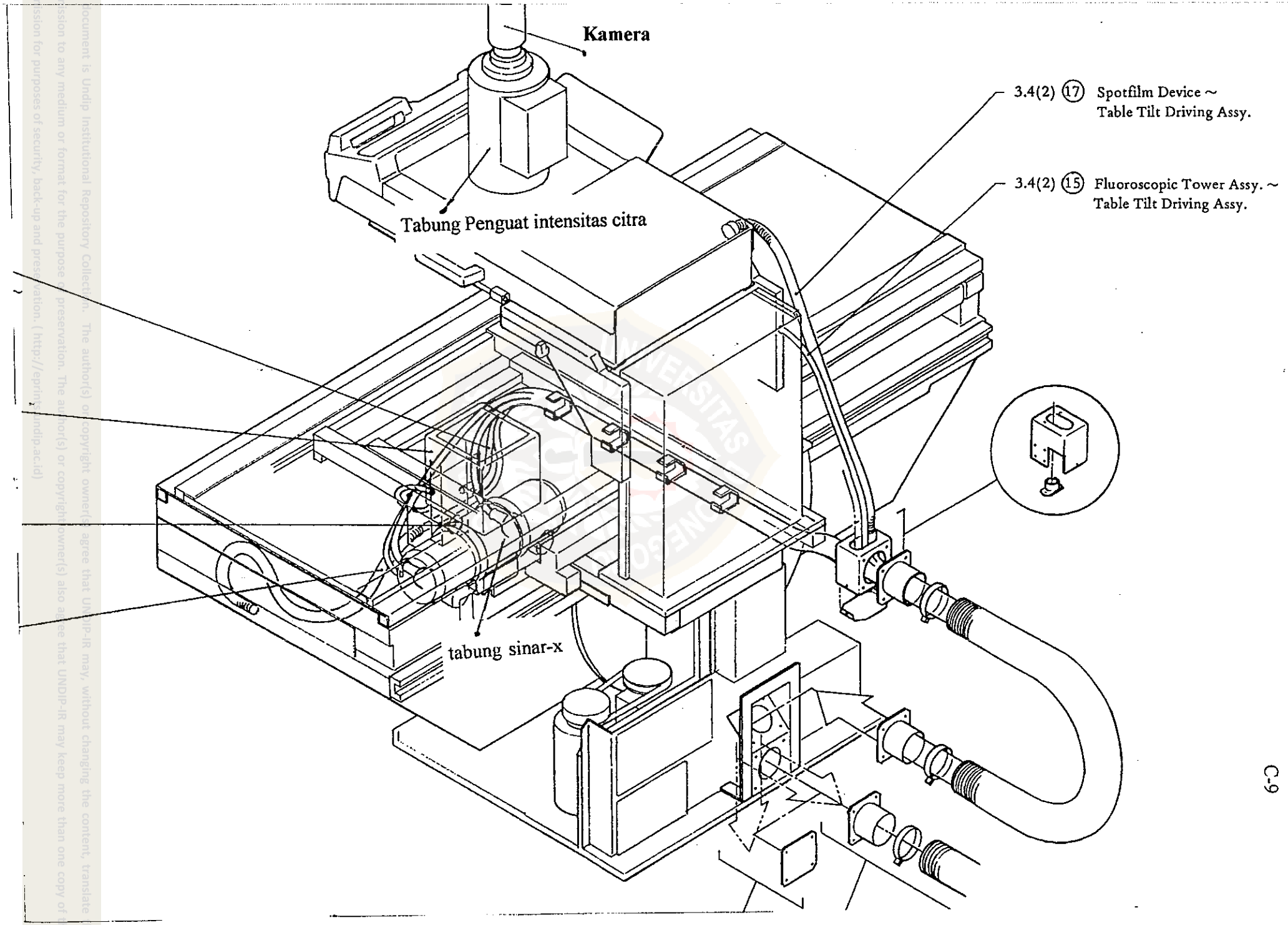

This document is Undip Institutional Repository Collection. The author(s) or copyright owner(s) agree that UNDIP-IR may, without changing the content, translate the submission to any medium or format for the purpose of preservation. The author(s) or copyright owner(s) also agree that UNDIP-IR may keep more than one copy of this submission for purposes of security, back-up and preservation. (http://eprints.undip.ac.id)

TABUNG IMAGE INTENSIFIER
PADA PESAWAT SHIMADZU XUD150

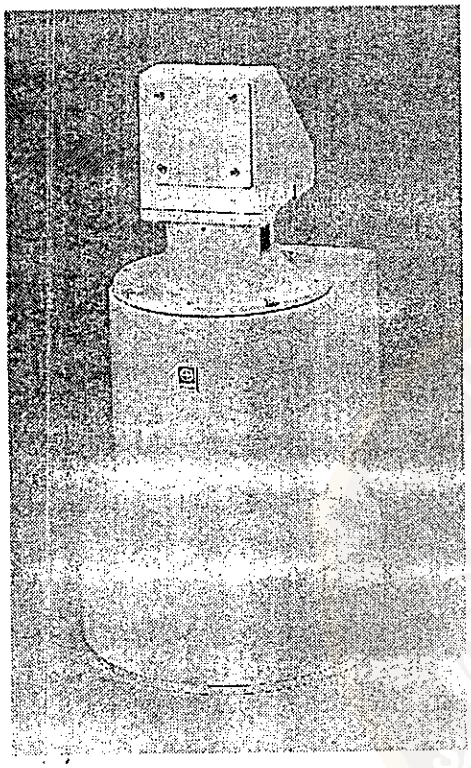

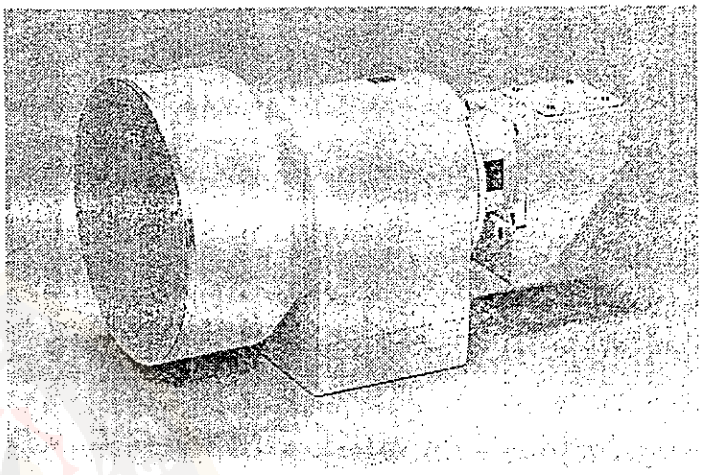

[Unit: mm]

Weight: 22.1 kg

This document is Undip Institutional Repository Collection. The author(s) or copyright owner(s) agree that UNDIP-IR may, without changing the content, translate the submission to any medium or format for the purpose of preservation. The author(s) or copyright owner(s) also agree that UNDIP-IR may keep more than one copy of this submission for purposes of security, back-up and preservation. (http://eprints.undip.ac.id)

TABUNG IMAGE INTENSIFIER
PADA PESAWAT SHIMADZU XUD150

IA-9VS11

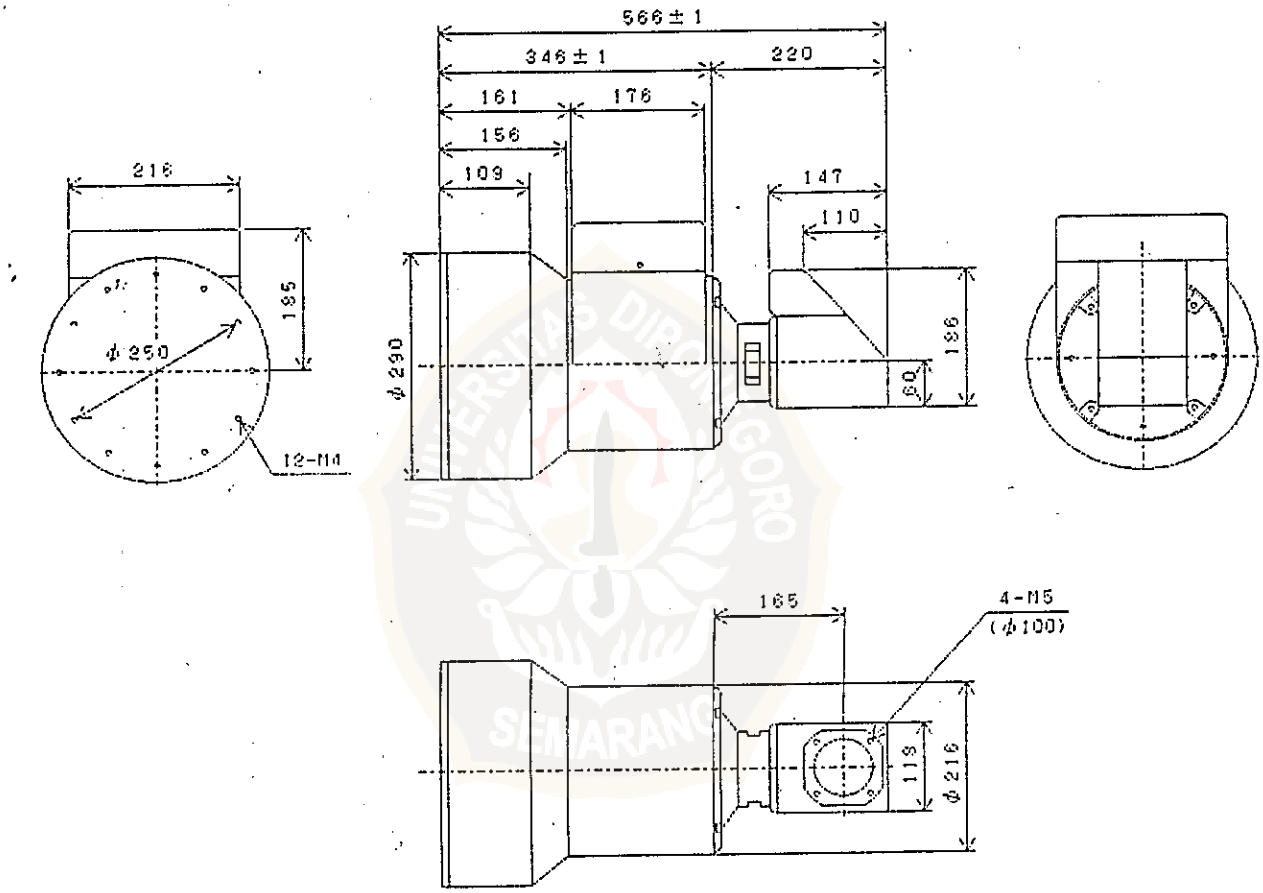

This document is Undip Institutional Repository Collection. The author(s) or copyright owner(s) agree that UNDIP-IR may, without changing the content, translate the submission to any medium or format for the purpose of preservation. The author(s) or copyright owner(s) also agree that UNDIP-IR may keep more than one copy of this submission for purposes of security, back-up and preservation. (http://eprints.undip.ac.id)

About the PCI video capture card

The video capture cards come with following features :

1. PCI 2.1 compliance with Plug & Play compatibility.
2. No feature connector, VGA loop-back cable needed.
3. Video/Audio interleave data stream conforms to Microsoft AVI file format.
4. Continuous AVI file capturing with up to 30 frames per second.
5. Microsoft Video for Windows driver interface for user application.
6. Support major VGA card with their chipset specific Direct Draw driver.
7. TV/FM tuner module ready.
8. Optional CCD camera, video conference kit.
9. External input sources include one composite AV via RCA jack, and one super VHS via 4-pin mini-din connector.

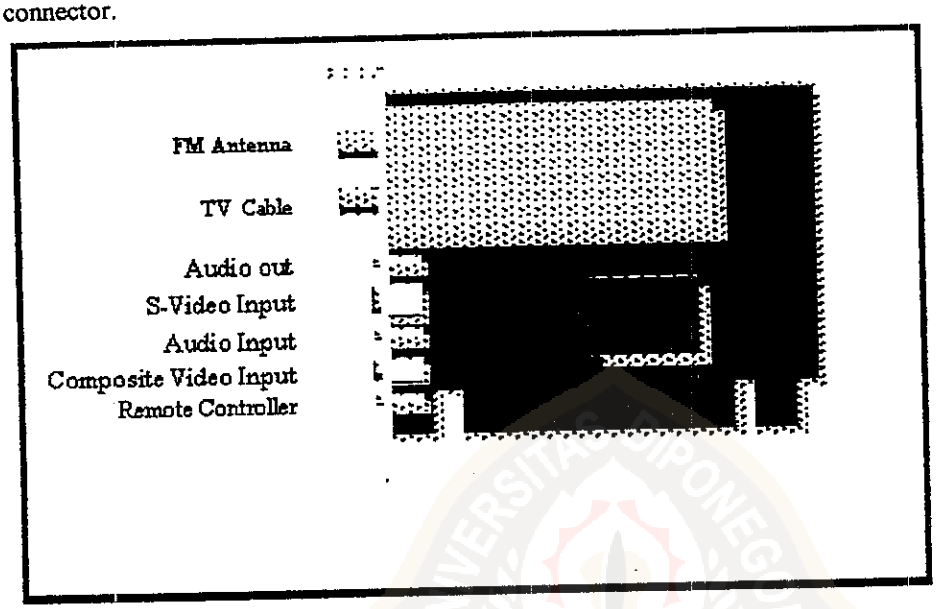

Notes :
The features described above are general in video capture products. Please refer to their respective product catalog, manual or packing box for detail product features and specifications.
The diagram shown above is connectors in general.

This document is Undip Institutional Repository Collection. The author(s) or copyright owner(s) agree that UNDIP-IR may, without changing the content, translate the submission to any medium or format for the purpose of preservation. The author(s) or copyright owner(s) also agree that UNDIP-IR may keep more than one copy of this submission for purposes of security, back-up and preservation. (http://eprints.undip.ac.id)

How to install video capture card ?

Congratulation ! You have the state-of-the-art video capture card to enhance your multimedia PC.
Let's see how to install it :

1. Turn computer power off and remove the cover of the PC.
2. Plug into any free PCI expansion slot.
3. Connect the SVHS device to 4 pins mini-din connector.
4. Connect the camcorder or any RCA composite video to RCA jack.
5. Connect the TV antenna or cable to the TV-in connector.
6. Connect the FM antenna to the FM-in connector.
7. Connect the speaker out to the line-in of the sound card.
8. Put the computer's cover back and power on.
9. Install the driver when Windows restart and request.
10. Setup Direct Draw driver and restart the computer.
11. Setup video capture application software.

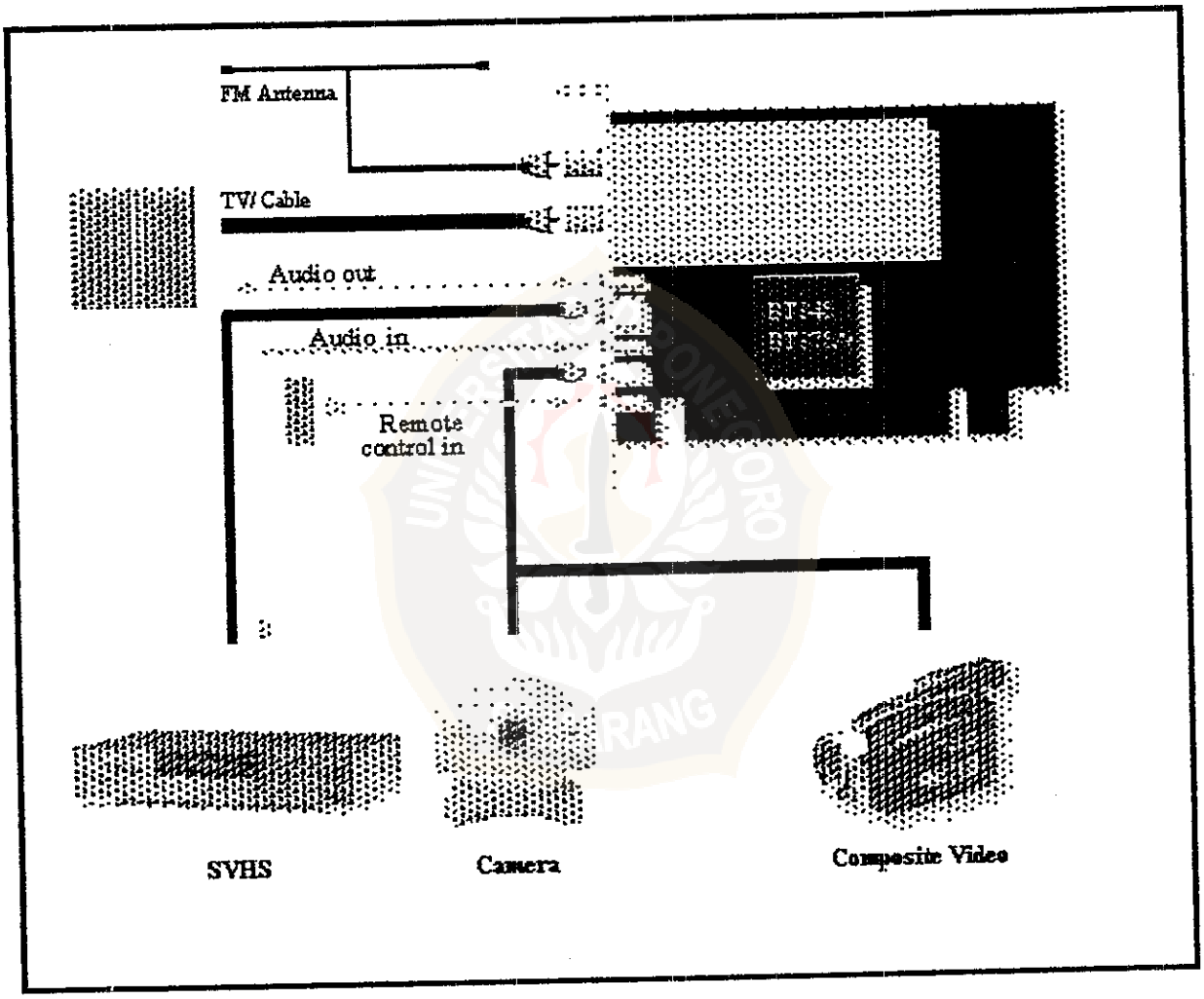

Notes :
The installation diagram shown above is connections in general.
For detail installation and connection procedures, please refer to the specific product user's manual.

Sound card is a must for volume control, video capture and video conference functions.

This document is Undip Institutional Repository Collection. The author(s) or copyright owner(s) agree that UNDIP-IR may, without changing the content, translate the submission to any medium or format for the purpose of preservation. The author(s) or copyright owner(s) also agree that UNDIP-IR may keep more than one copy of this submission for purposes of security, back-up and preservation. (http://eprints.undip.ac.id)