Daftar Komponen

Kode	Nama Komponen	Bahan	Ukuran
R1	Resistor	Karbon	RA KΩ/ 0,5 W
R2	Resistor	Karbon	1 KΩ / 0,5 W
R3	Resistor	Karbon	100 KΩ / 0,5 W
R4	Resistor	Karbon	100 Ω / 0,5 W
R5	Resistor	Karbon	1 MΩ/ 0,5 W
R6	Resistor	Karbon	10 KΩ / 0,5 W
R7	Resistor	Karbon	12 KΩ / 0,5 W
R8	Resistor	Karbon	6,8 KΩ / 0,5 W
R9	Resistor	Karbon	10 KΩ / 0,5 W
R10	Resistor	Karbon	10 KΩ / 0,5 W
R11	Resistor	Karbon	56 KΩ / 0,5 W
C1	Kapasitor	Elektrolit	0,22 μF/16 V
C2	Kapasitor	Elektrolit	0,1 μF/16V
C3	Kapasitor	Elektrolit	0,1 μF/16V
C4	Kapasitor	Elektrolit	0,1 μF/16V
C5	Kapasitor	Elektrolit	0,1 μF/16V
C6	Kapasitor	Elektrolit	1 μF/16V
C7	Kapasitor	Elektrolit	0,22 μF/16V
VR	Trimpot	Karbon	100 KΩ/ 0,5 W
D	Infra merah	G As	
P	Phototransistor		
A1	IC		LM 5 5 5
A2	IC		LM 1458
A3	IC		LM 3 3 1

LAMPIRAN B

DATA IC LM 555

National Semiconductor

Industrial Blocks

LM555/LM555C Timer

General Description

The LM555 is a highly stable device for generating accurate time delays or oscillation. Additional terminals are provided for triggering or resetting if desired. In the time delay mode of operation, the time is precisely controlled by one external resistor and capacitor. For astable operation as an oscillator, the free running frequency and duty cycle are accurately controlled with two external resistors and one capacitor. The circuit may be triggered and reset on falling waveforms, and the output circuit can source or sink up to 200 mA or drive TTL circuits.

Features

- Direct replacement for SE555/NE555
- Timing from microseconds through hours
- Operates in both astable and monostable modes
- Adjustable duty cycle
- Output can source or sink 200 mA
- Output and supply TTL compatible
- Temperature stability better than 0.005% per °C
- Normally on and normally off output

Applications

- Precision timing
- Pulse generation
- Sequential timing
- Time delay generation
- Pulse width modulation
- Pulse position modulation
- Linear ramp generator

Schematic Diagram

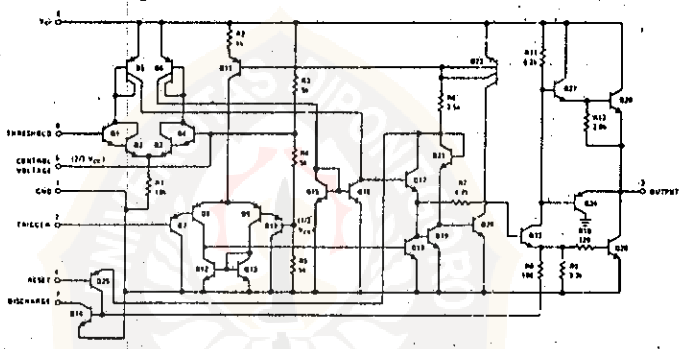

Connection Diagrams

Metal Can Package

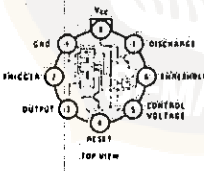

Order Number LM555H, LM555CH
See NS Package H08C

Dual-In-Line Package

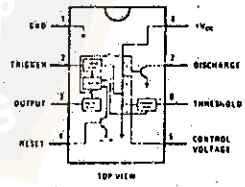

Order Number LM555CN
See NS Package N08B
Order Number LM555J or LM555CJ
See NS Package J08A

Absolute Maximum Ratings

Supply Voltage (LM386N)	15V	Storage Temperature	−65°C to +150°C
Supply Voltage (LM386N-4)	22V	Operating Temperature	0°C to +70°C
Package Dissipation (Note 1) (LM386N-4)	1.25W	Junction Temperature	+150°C
Package Dissipation (Note 2) (LM386)	660 mW	Lead Temperature (Soldering, 10 seconds)	+300°C
Input Voltage	±0.4V		

Electrical Characteristics T_A = 25°C

PARAMETER	CONDITIONS	MIN	TYP	MAX	UNITS
Operating Supply Voltage (V_S)					
LM386		4		12	V
LM386N-4		5		18	V
Quiescent Current (I_Q)	V_S = 6V, V_{IN} = 0		4	8	mA
Output Power (P_{OUT})					
LM386N-1	V_S = 6V, R_L = 8Ω, THD = 10%	250	325		mW
LM386N-3	V_S = 9V, R_L = 8Ω, THD = 10%	500	700		mW
LM386N-4	V_S = 16V, R_L = 32Ω, THD = 10%	700	1000		mW
Voltage Gain (A_V)	V_S = 6V, f = 1 kHz		26		dB
	10μF from Pin 1 to 8		46		dB
Bandwidth (BW)	V_S = 6V, Pins 1 and 8 Open		300		kHz
Total Harmonic Distortion (THD)	V_S = 6V, R_L = 8Ω, P_{OUT} = 125 mW f = 1 kHz, Pins 1 and 8 Open		0.2		%
Power Supply Rejection Ratio (PSRR)	V_S = 6V, f = 1 kHz, C_{BYPASS} = 10μF Pins 1 and 8 Open, Referred to Output		50		dB
Input Resistance (R_{IN})			50		kΩ
Input Bias Current (I_{BIAS})	V_S = 6V, Pins 2 and 3 Open		250		nA

Note 1: For operation in ambient temperatures above 25°C, the device must be derated based on a 150°C maximum junction temperature and a thermal resistance of 100°C/W junction to ambient.

Note 2: For operation in ambient temperatures above 25°C, the device must be derated based on a 150°C maximum junction temperature and a thermal resistance of 187°C junction to ambient.

Application Hints

GAIN CONTROL

To make the LM386 a more versatile amplifier, two pins (1 and 8) are provided for gain control. With pins 1 and 8 open the 1.35 kΩ resistor sets the gain at 20 (26 dB). If a capacitor is put from pin 1 to 8, bypassing the 1.35 kΩ resistor, the gain will go up to 200 (46 dB). If a resistor is placed in series with the capacitor, the gain can be set to any value from 20 to 200. Gain control can also be done by capacitively coupling a resistor (or FET) from pin 1 to ground.

Additional external components can be placed in parallel with the internal feedback resistors to tailor the gain and frequency response for individual applications. For example, we can compensate poor speaker bass response by frequency shaping the feedback path. This is done with a series RC from pin 1 to 5 (paralleling the internal 15 kΩ resistor). For 6 dB effective bass boost: R ≅ 15 kΩ, the lowest value for good stable operation is R = 10 kΩ if pin 8 is open. If pins 1 and 8 are bypassed then R as low as 2 kΩ can be used. This restriction is because the amplifier is only compensated for closed-loop gains greater than 9.

INPUT BIASING

The schematic shows that both inputs are biased to ground with a 50 kΩ resistor. The base current of the input transistors is about 250 nA, so the inputs are at about 12.5 mV when left open. If the dc source resistance driving the LM386 is higher than 250 kΩ it will contribute very little additional offset (about 2.5 mV at the input, 50 mV at the output). If the dc source resistance is less than 10 kΩ, then shorting the unused input to ground will keep the offset low (about 2.5 mV at the input, 50 mV at the output). For dc source resistances between these values we can eliminate excess offset by putting a resistor from the unused input to ground, equal in value to the dc source resistance. Of course all offset problems are eliminated if the input is capacitively coupled.

When using the LM386 with higher gains (bypassing the 1.35 kΩ resistor between pins 1 and 8) it is necessary to bypass the unused input, preventing degradation of gain and possible instabilities. This is done with a 0.1μF capacitor or a short to ground depending on the dc source resistance on the driven input.

LAMPIRAN C

DATA IC LM 331

National Semiconductor

LM131A/LM131, LM231A/LM231, LM331A/LM331 Precision Voltage-to-Frequency Converters

General Description

The LM131/LM231/LM331 family of voltage-to-frequency converters are ideally suited for use in simple low-cost circuits for analog-to-digital conversion, precision frequency-to-voltage conversion, long-term integration, linear frequency modulation or demodulation, and many other functions. The output when used as a voltage-to-frequency converter is a pulse train at a frequency precisely proportional to the applied input voltage. Thus, it provides all the inherent advantages of the voltage-to-frequency conversion techniques, and is easy to apply in all standard voltage-to-frequency converter applications. Further, the LM131A/LM231A/LM331A attains a new high level of accuracy versus temperature which could only be attained with expensive voltage-to-frequency modules. Additionally the LM131 is ideally suited for use in digital systems at low power supply voltages and can provide low-cost analog-to-digital conversion in microprocessor-controlled systems. And, the frequency from a battery powered voltage-to-frequency converter can be easily channeled through a simple photoisolator to provide isolation against high common mode levels.

The LM131/LM231/LM331 utilizes a new temperature-compensated band-gap reference circuit, to provide excellent accuracy over the full operating temperature range, at power supplies as low as 4.0V. The precision timer circuit has low bias currents without degrading the quick response necessary for 100 kHz voltage-to-frequency conversion. And the output is capable of driving 3 TTL loads, or a high voltage output up to 40V yet is short-circuit-proof against V_{CC}.

Features

- Guaranteed linearity 0.01% max
- Improved performance in existing voltage-to-frequency conversion applications
- Split or single supply operation
- Operates on single 5V supply
- Pulse output compatible with all logic forms
- Excellent temperature stability, ±50 ppm/°C max
- Low power dissipation, 15 mW typical at 5V
- Wide dynamic range, 100 dB min at 10 kHz full scale frequency
- Wide range of full scale frequency, 1 Hz to 100 kHz
- Low cost

Typical Applications

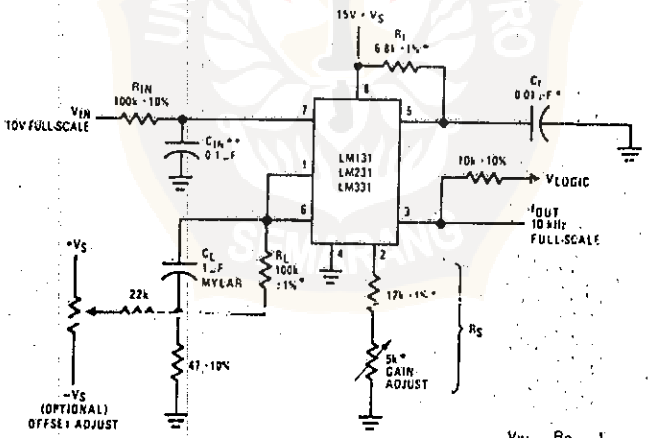

$$f_{OUT} = \frac{V_{IN}}{2.09\,V} \cdot \frac{R_S}{R_I} \cdot \frac{1}{R_L C_L}$$

TL/H/5680-1

*Use stable components with low temperature coefficients. See Typical Applications section.

**0.1 μF or 1 μF. See "Principles of Operation."

FIGURE 1. Simple Stand-Alone Voltage-to-Frequency Converter with ±0.03% Typical Linearity (f 10 Hz to 11 kHz)

Absolute Maximum Ratings (Note 1)

If Military/Aerospace specified devices are required, please contact the National Semiconductor Sales Office/ Distributors for availability and specifications.

	LM131A/LM131	LM231A/LM231	LM331A/LM331
Supply Voltage	40V	40V	40V
Output Short Circuit to Ground	Continuous	Continuous	Continuous
Output Short Circuit to V_{CC}	Continuous	Continuous	Continuous
Input Voltage	−0.2V to +V_S	−0.2V to +V_S	−0.2V to +V_S
Operating Ambient Temperature Range	T_{MIN} T_{MAX} −55°C to +125°C	T_{MIN} T_{MAX} −25°C to +85°C	T_{MIN} T_{MAX} 0°C to +70°C
Power Dissipation (P_D at 25°C) and Thermal Resistance (θ_{JA})			
(H Package) P_D	670 mW		
θ_{JA}	150°C/W		
(N Package) P_D		1.25W	1.25W
θ_{JA}		100°C/W	100°C/W
(M Package) P_D		1.25W	
θ_{JA}		85°C/W	
Lead Temperature (Soldering, 10 sec.)			
Dual-In-Line Package (Plastic)	260°C	260°C	260°C
Metal Can Package (TO-5)	300°C		
ESD Susceptibility (Note 4)			
Metal Can Package (TO-5)	2000V		
Other Packages		500V	500V

Electrical Characteristics T_A = 25°C unless otherwise specified (Note 2)

Parameter	Conditions	Min	Typ	Max	Units
VFC Non-Linearity (Note 3)	4.5V ≤ V_S ≤ 20V		±0.003	±0.01	% Full-Scale
	T_{MIN} ≤ T_A ≤ T_{MAX}		±0.006	±0.02	% Full-Scale
VFC Non-Linearity In Circuit of *Figure 1*	V_S = 15V, f = 10 Hz to 11 kHz		±0.024	±0.14	%Full-Scale
Conversion Accuracy Scale Factor (Gain)	V_{IN} = −10V, R_S = 14 kΩ				
LM131, LM131A, LM231, LM231A		0.95	1.00	1.05	kHz/V
LM331, LM331A		0.90	1.00	1.10	kHz/V
Temperature Stability of Gain	T_{MIN} ≤ T_A ≤ T_{MAX}, 4.5V ≤ V_S ≤ 20V				
LM131/LM231/LM331			±30	±150	ppm/°C
LM131A/LM231A/LM331A			±20	±50	ppm/°C
Change of Gain with V_S	4.5V ≤ V_S ≤ 10V		0.01	0.1	%/V
	10V ≤ V_S ≤ 40V		0.006	0.06	%/V
Rated Full-Scale Frequency	V_{IN} = −10V	10.0			kHz
Gain Stability vs Time (1000 Hrs)	T_{MIN} ≤ T_A ≤ T_{MAX}		±0.02		% Full-Scale
Overrange (Beyond Full-Scale) Frequency	V_{IN} = −11V	10			%
INPUT COMPARATOR					
Offset Voltage					
LM131/LM231/LM331	T_{MIN} ≤ T_A ≤ T_{MAX}		±3	±10	mV
LM131A/LM231A/LM331A	T_{MIN} ≤ T_A ≤ T_{MAX}		±4	±14	mV
			±3	±10	mV
Bias Current			30	−300	nA
Offset Current			±8	±100	nA
Common-Mode Range	T_{MIN} ≤ T_A ≤ T_{MAX}	−0.2		V_{CC}−2.0	V

Electrical Characteristics $T_A = 25°C$ unless otherwise specified (Note 2) (Continued)

Parameter	Conditions	Min	Typ	Max	Units
TIMER					
Timer Threshold Voltage, Pin 5		0.63	0.667	0.70	× V_S
Input Bias Current, Pin 5	$V_S = 15V$				
All Devices	$0V \le V_{PIN\ 5} \le 9.9V$		±10	±100	nA
LM131/LM231/LM331	$V_{PIN\ 5} = 10V$		200	1000	nA
LM131A/LM231A/LM331A	$V_{PIN\ 5} = 10V$		200	500	nA
$V_{SAT\ PIN\ 5}$ (Reset)	$I = 5\ mA$		0.22	0.5	V
CURRENT SOURCE (Pin 1)					
Output Current	$R_S = 14\ k\Omega$, $V_{PIN\ 1} = 0$				
LM131, LM131A, LM231, LM231A		126	135	144	μA
LM331, LM331A		116	136	156	μA
Change with Voltage	$0V \le V_{PIN\ 1} \le 10V$		0.2	1.0	μA
Current Source OFF Leakage					
LM131, LM131A			0.01	1.0	nA
LM231, LM231A, LM331, LM331A			0.02	10.0	nA
All Devices	$T_A = T_{MAX}$		2.0	50.0	nA
Operating Range of Current (Typical)			(10 to 500)		μA
REFERENCE VOLTAGE (Pin 2)					
LM131, LM131A, LM231, LM231A		1.76	1.89	2.02	V_{DC}
LM331, LM331A		1.70	1.89	2.08	V_{DC}
Stability vs Temperature			±60		ppm/°C
Stability vs Time, 1000 Hours			±0.1		%
LOGIC OUTPUT (Pin 3)					
V_{SAT}	$I = 5\ mA$		0.15	0.50	V
	$I = 3.2\ mA$ (2 TTL Loads), $T_{MIN} \le T_A \le T_{MAX}$		0.10	0.40	V
OFF Leakage			±0.05	1.0	μA
SUPPLY CURRENT					
LM131, LM131A, LM231, LM231A	$V_S = 5V$	2.0	3.0	4.0	mA
	$V_S = 40V$	2.5	4.0	6.0	mA
LM331, LM331A	$V_S = 5V$	1.5	3.0	6.0	mA
	$V_S = 40V$	2.0	4.0	8.0	mA

Note 1: Absolute Maximum Ratings indicate limits beyond which damage to the device may occur. DC and AC electrical specifications do not apply when operating the device beyond its specified operating conditions.

Note 2: All specifications apply in the circuit of *Figure 3*, with $4.0V \le V_S \le 40V$, unless otherwise noted.

Note 3: Nonlinearity is defined as the deviation of f_{OUT} from $V_{IN} \times (10\ kHz/10\ V_{DC})$ when the circuit has been trimmed for zero error at 10 Hz and at 10 kHz, over the frequency range 1 Hz to 11 kHz. For the timing capacitor, C_T, use NPO ceramic, Teflon®, or polystyrene.

Note 4: Human body model, 100 pF discharged through a 1.5 kΩ resistor.

Functional Block Diagram

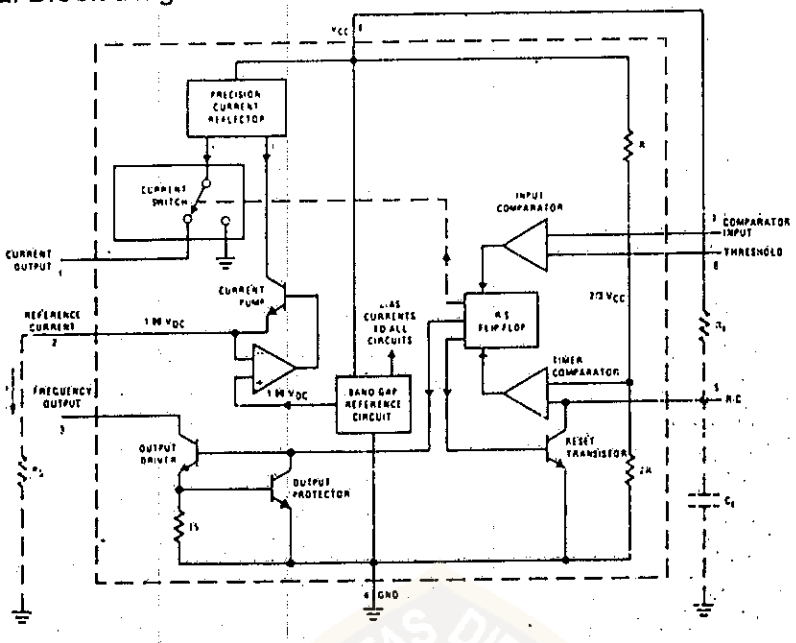

TL/H/5680-2

Pin numbers apply to 8-pin packages only. See connection diagram for LM231WM pin numbers.

FIGURE 1a

2

Typical Applications (Continued)

PRINCIPLES OF OPERATION OF A SIMPLIFIED VOLTAGE-TO-FREQUENCY CONVERTER

The LM131 is a monolithic circuit designed for accuracy and versatile operation when applied as a voltage-to-frequency (V-to-F) converter or as a frequency-to-voltage (F-to-V) converter. A simplified block diagram of the LM131 is shown in *Figure 2* and consists of a switched current source, input comparator, and 1-shot timer.

The operation of these blocks is best understood by going through the operating cycle of the basic V-to-F converter, *Figure 2*, which consists of the simplified block diagram of the LM131 and the various resistors and capacitors connected to it.

The voltage comparator compares a positive input voltage, V1, at pin 7 to the voltage, V_x, at pin 6. If V1 is greater, the comparator will trigger the 1-shot timer. The output of the timer will turn ON both the frequency output transistor and the switched current source for a period $t = 1.1\ R_tC_t$. During this period, the current i will flow out of the switched current source and provide a fixed amount of charge, $Q = i \times t$, into the capacitor, C_L. This will normally charge V_x up to a higher level than V1. At the end of the timing period, the current i will turn OFF, and the timer will reset itself.

Now there is no current flowing from pin 1, and the capacitor C_L will be gradually discharged by R_L until V_x falls to the level of V1. Then the comparator will trigger the timer and start another cycle.

The current flowing into C_L is exactly $I_{AVE} = i \times (1.1 \cdot R_tC_t) \times f$, and the current flowing out of C_L is exactly $V_x/R_L \approx V_{IN}/R_L$. If V_{IN} is doubled, the frequency will double to maintain this balance. Even a simple V-to-F converter can provide a frequency precisely proportional to its input voltage over a wide range of frequencies.

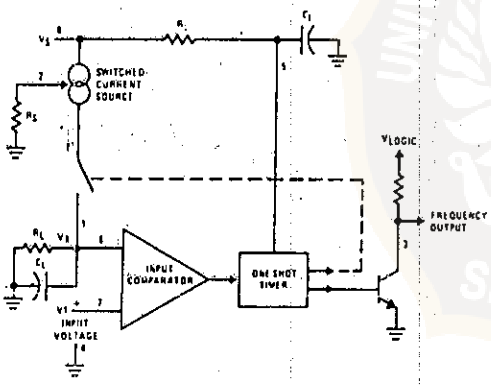

TL/H/5680–4

FIGURE 2. Simplified Block Diagram of Stand-Alone Voltage-to-Frequency Converter Showing LM131 and External Components

DETAIL OF OPERATION, FUNCTIONAL BLOCK DIAGRAM (*FIGURE 1a*)

The block diagram shows a band gap reference which provides a stable 1.9 V_{DC} output. This 1.9 V_{DC} is well regulated over a V_S range of 3.9V to 40V. It also has a flat, low temperature coefficient, and typically changes less than ½% over a 100°C temperature change.

The current pump circuit forces the voltage at pin 2 to be at 1.9V, and causes a current $i = 1.90V/R_S$ to flow. For $R_S = 14k$, $i = 135\ \mu A$. The precision current reflector provides a current equal to i to the current switch. The current switch switches the current to pin 1 or to ground depending on the state of the R_S flip-flop.

The timing function consists of an R_S flip-flop, and a timer comparator connected to the external R_tC_t network. When the input comparator detects a voltage at pin 7 higher than pin 6, it sets the R_S flip-flop which turns ON the current switch and the output driver transistor. When the voltage at pin 5 rises to ⅔ V_{CC}, the timer comparator causes the R_S flip-flop to reset. The reset transistor is then turned ON and the current switch is turned OFF.

However, if the input comparator still detects pin 7 higher than pin 6 when pin 5 crosses ⅔ V_{CC}, the flip-flop will not be reset, and the current at pin 1 will continue to flow, in its attempt to make the voltage at pin 6 higher than pin 7. This condition will usually apply under start-up conditions or in the case of an overload voltage at signal input. It should be noted that during this sort of overload, the output frequency will be 0; as soon as the signal is restored to the working range, the output frequency will be resumed.

The output driver transistor acts to saturate pin 3 with an ON resistance of about 50Ω. In case of overvoltage, the output current is actively limited to less than 50 mA.

The voltage at pin 2 is regulated at 1.90 V_{DC} for all values of i between 10 μA to 500 μA. It can be used as a voltage reference for other components, but care must be taken to ensure that current is not taken from it which could reduce the accuracy of the converter.

PRINCIPLES OF OPERATION OF BASIC VOLTAGE-TO-FREQUENCY CONVERTER (*FIGURE 1*)

The simple stand-alone V-to-F converter shown in *Figure 1* includes all the basic circuitry of *Figure 2* plus a few components for improved performance.

A resistor, $R_{IN} = 100\ k\Omega \pm 10\%$, has been added in the path to pin 7, so that the bias current at pin 7 (−80 nA typical) will cancel the effect of the bias current at pin 6 and help provide minimum frequency offset.

The resistance R_S at pin 2 is made up of a 12 kΩ fixed resistor plus a 5 kΩ (cermet, preferably) gain adjust rheostat. The function of this adjustment is to trim out the gain tolerance of the LM131, and the tolerance of R_t, R_L and C_t.

Typical Performance Characteristics

(All electrical characteristics apply for the circuit of *Figure 3*, unless otherwise noted.)

Nonlinearity Error, LM131 Family, as Precision V-to-F Converter (*Figure 3*)

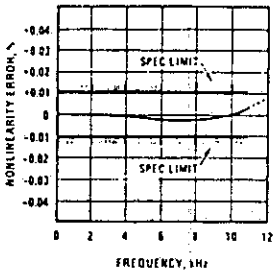

Nonlinearity Error, LM131 Family

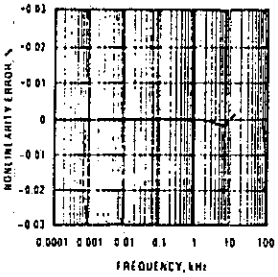

Nonlinearity vs Power Supply Voltage

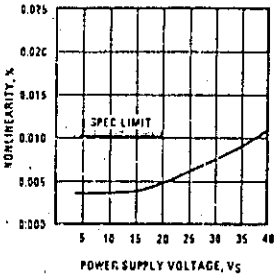

Frequency vs Temperature, LM131A

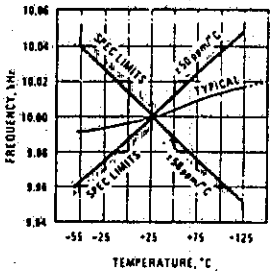

V_{REF} vs Temperature, LM131A

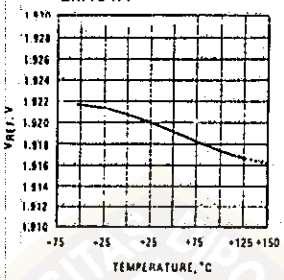

Output Frequency vs V_{SUPPLY}

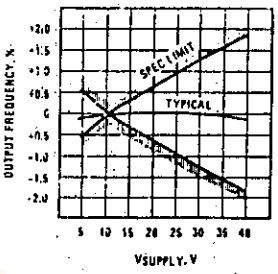

100 kHz Nonlinearity Error, LM131 Family (*Figure 4*)

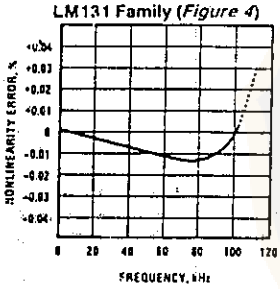

Nonlinearity Error, LM131 (*Figure 1*)

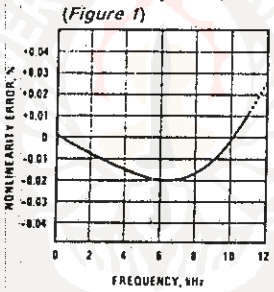

Input Current (Pins 6, 7) vs Temperature

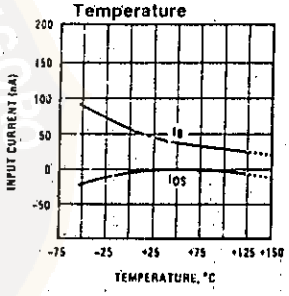

Power Drain vs V_{SUPPLY}

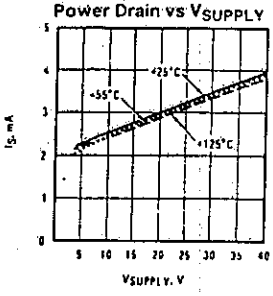

Output Saturation Voltage vs I_{OUT} (Pin 3)

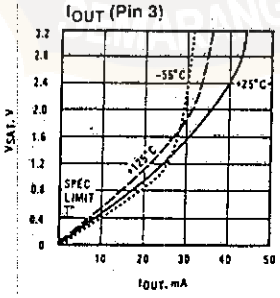

Nonlinearity Error, Precision F-to-V Converter (*Figure 6*)

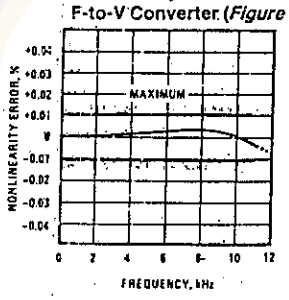

TL/H/5680–3

Typical Applications (Continued)

For best results, all the components should be stable low-temperature-coefficient components, such as metal-film resistors. The capacitor should have low dielectric absorption; depending on the temperature characteristics desired, NPO ceramic, polystyrene, Teflon or polypropylene are best suited.

A capacitor C_{IN} is added from pin 7 to ground to act as a filter for V_{IN}. A value of 0.01 μF to 0.1 μF will be adequate in most cases; however, in cases where better filtering is required, a 1 μF capacitor can be used. When the RC time constants are matched at pin 6 and pin 7, a voltage step at V_{IN} will cause a step change in f_{OUT}. If C_{IN} is much less than C_L, a step at V_{IN} may cause f_{OUT} to stop momentarily.

A 47Ω resistor, in series with the 1 μF C_L, is added to give hysteresis effect which helps the input comparator provide the excellent linearity (0.03% typical).

DETAIL OF OPERATION OF PRECISION V-TO-F CONVERTER (*FIGURE 3*)

In this circuit, integration is performed by using a conventional operational amplifier and feedback capacitor, C_F. When the integrator's output crosses the nominal threshold level at pin 6 of the LM131, the timing cycle is initiated.

The average current fed into the op amp's summing point (pin 2) is V_{IN}/R_{IN}. In this circuit, the voltage offset of the LM131 input comparator does not affect the offset or accuracy of the V-to-F converter as it does in the stand-alone V-to-F converter; nor does the LM131 bias current or offset current. Instead, the offset voltage and offset current of the operational amplifier are the only limits on how small the signal can be accurately converted. Since op amps with voltage offset well below 1 mV and offset currents well below 2 nA are available at low cost, this circuit is recommended for best accuracy for small signals. This circuit also responds immediately to any change of input signal (which a stand-alone circuit does not) so that the output frequency will be an accurate representation of V_{IN}, as quickly as 2 output pulses' spacing can be measured.

In the precision mode, excellent linearity is obtained because the current source (pin 1) is always at ground potential and that voltage does not vary with V_{IN} or f_{OUT}. (In the stand-alone V-to-F converter, a major cause of non-linearity is the output impedance at pin 1 which causes i to change as a function of V_{IN}).

The circuit of *Figure 4* operates in the same way as *Figure 3*, but with the necessary changes for high speed operation.

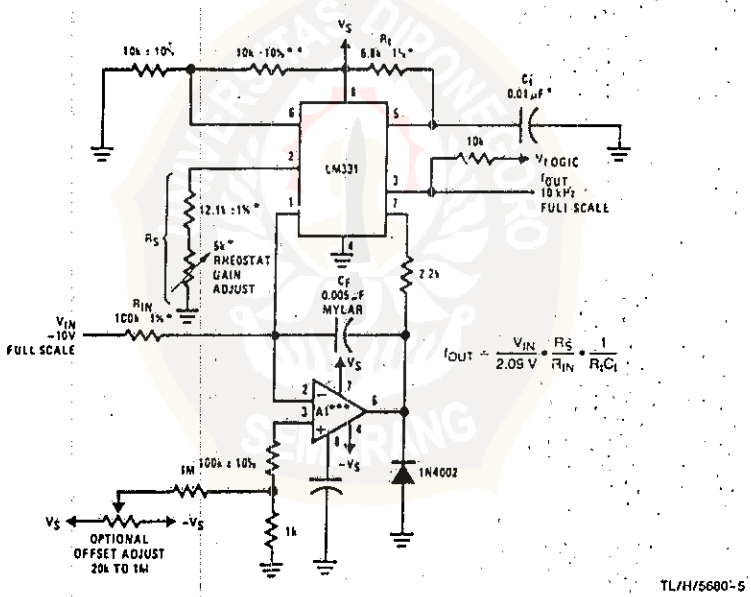

TL/H/5680-5

*Use stable components with low temperature coefficients. See Typical Applications section.

**This resistor can be 5 kΩ or 10 kΩ for V_S = 8V to 22V, but must be 10 kΩ for V_S = 4.5V to 8V.

***Use low offset voltage and low offset current op amps for A1: recommended types LM108, LM308A, LF411A

FIGURE 3. Standard Test Circuit and Applications Circuit, Precision Voltage-to-Frequency Converter

Typical Applications (Continued)

DETAILS OF OPERATION, FREQUENCY-TO-VOLTAGE CONVERTERS *(FIGURES 5 AND 6)*

In these applications, a pulse input at f_{IN} is differentiated by a C-R network and the negative-going edge at pin 6 causes the input comparator to trigger the timer circuit. Just as with a V-to-F converter, the average current flowing out of pin 1 is $I_{AVERAGE} = 1 \cdot (1.1\ R_1C_1) \cdot f$.

In the simple circuit of *FIGURE 5*, this current is filtered in the network $R_L = 100\ k\Omega$ and $1\ \mu F$. The ripple will be less than 10 mV peak, but the response will be slow, with a 0.1 second time constant, and settling of 0.7 second to 0.1% accuracy.

In the precision circuit, an operational amplifier provides a buffered output and also acts as a 2-pole filter. The ripple will be less than 5 mV peak for all frequencies above 1 kHz, and the response time will be much quicker than in *Figure 5*. However, for input frequencies below 200 Hz, this circuit will have worse ripple than *Figure 5*. The engineering of the filter time-constants to get adequate response and small enough ripple simply requires a study of the compromises to be made. Inherently, V-to-F converter response can be fast, but F-to-V response can not.

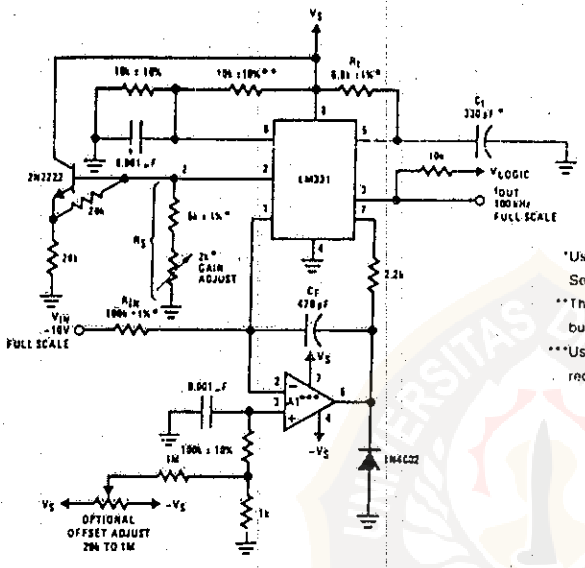

*Use stable components with low temperature coefficients. See Typical Applications section.

**This resistor can be 5 kΩ or 10 kΩ for V_S = 8V to 22V, but must be 10 kΩ for V_S = 4.5V to 8V.

***Use low offset voltage and low offset current op amps for A1: recommended types LF411A or LF356.

TL/H/5680-5

FIGURE 4. Precision Voltage-to-Frequency Converter, 100 kHz Full-Scale, ±0.03% Non-Linearity

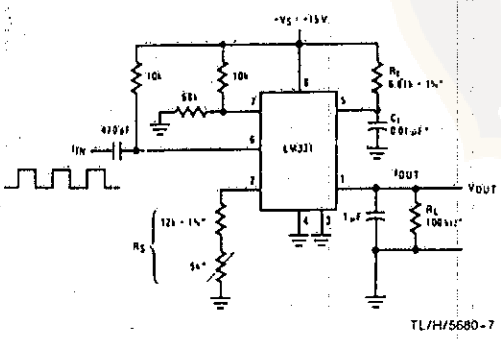

TL/H/5680-7

$$V_{OUT} = f_{IN} \times 2.09V \times \frac{R_L}{R_S} \times (R_1C_1)$$

*Use stable components with low temperature coefficients.

FIGURE 5. Simple Frequency-to-Voltage Converter, 10 kHz Full-Scale, ±0.06% Non-Linearity

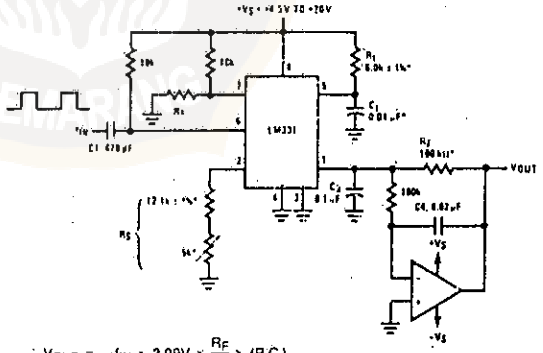

$$V_{OUT} = f_{IN} \times 2.09V \times \frac{R_F}{R_S} \times (R_1C_1)$$

TL/H/5680-6

$$\text{SELECT } R_X = \frac{(V_S - 2V)}{0.2\ mA}$$

*Use stable components with low temperature coefficients.

FIGURE 6. Precision Frequency-to-Voltage Converter, 10 kHz Full-Scale with 2-Pole Filter, ±0.01% Non-Linearity Maximum

Typical Applications (Continued)

Light Intensity to Frequency Converter

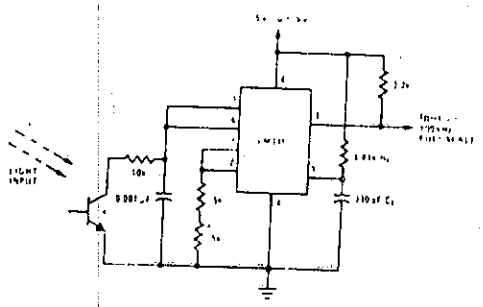

*(L14F-1, L14G-1 or L14H-1 plastic transistor General Electric Co.) or similar

TL/H/5680-9

Temperature to Frequency Converter

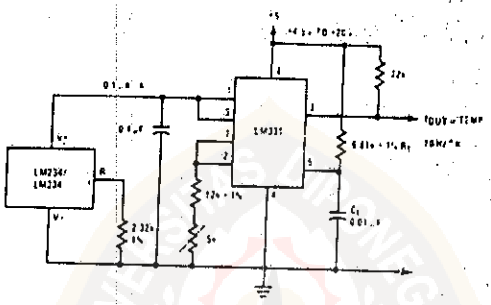

TL/H/5680-10

Long-Term Digital Integrator Using VFC

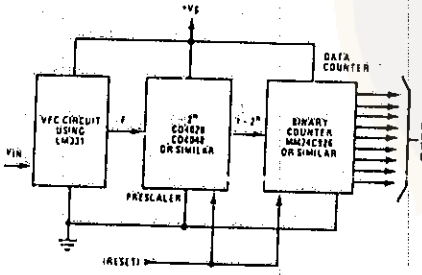

TL/H/5680-11

Basic Analog-to-Digital Converter Using Voltage-to-Frequency Converter

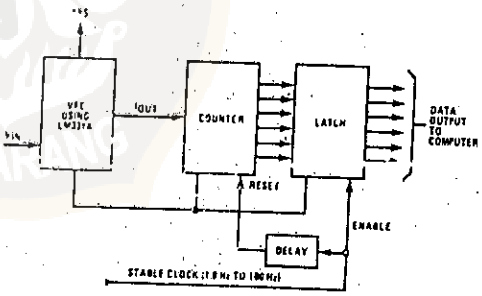

TL/H/5680-12

Typical Applications (Continued)

Analog-to-Digital Converter with Microprocessor

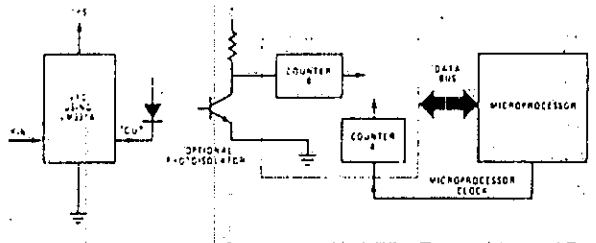

TL/H/5680–13

Remote Voltage-to-Frequency Converter with 2-Wire Transmitter and Receiver

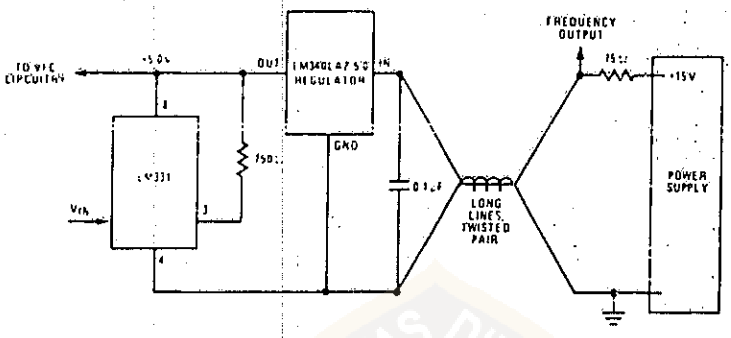

TL/H/5680–14

Voltage-to-Frequency Converter with Square-Wave Output Using ÷ 2 Flip-Flop

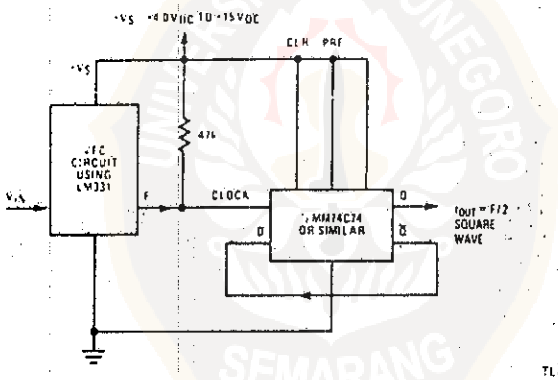

TL/H/5680–15

Voltage-to-Frequency Converter with Isolators

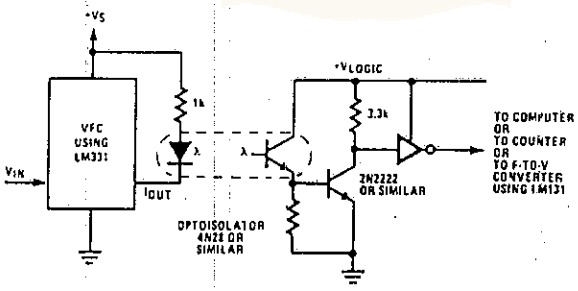

TL/H/5680–16

Typical Applications (Continued)

Voltage-to-Frequency Converter with Isolators

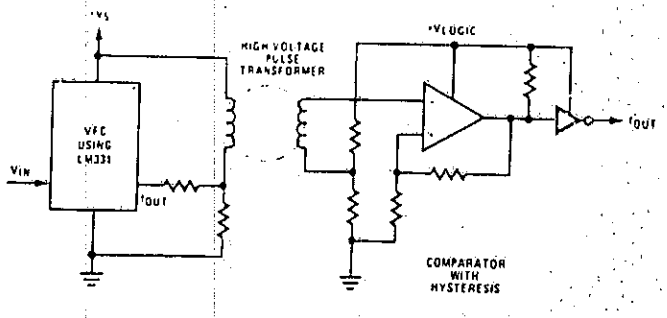

TL/H/5680–17

Voltage-to-Frequency Converter with Isolators

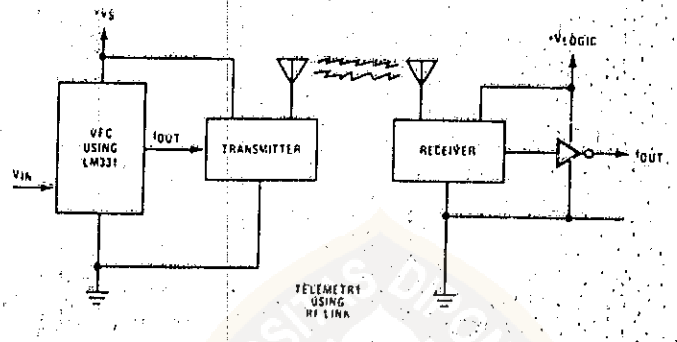

TL/H/5680–18

Voltage-to-Frequency Converter with Isolators

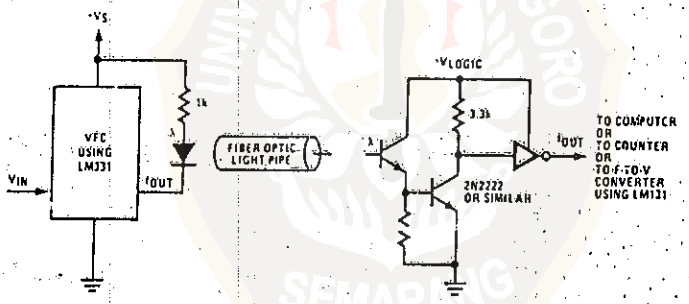

TL/H/5680–19

Connection Diagrams

Metal Can Package

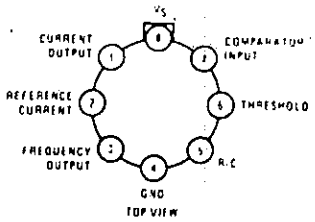

TL/H/5680-20

Note: Metal case is connected to pin 4 (GND).

Order Number LM131H/883 or LM131AH/883
See NS Package Number H08C

Dual-In-Line Package

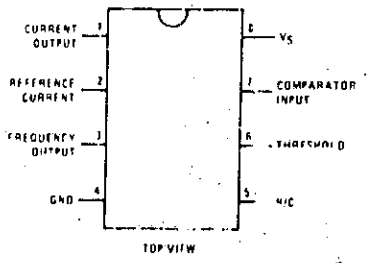

TL/H/5680-21

Order Number LM231AN, LM231N, LM331AN, or LM331N
See NS Package Number N08E

Small-Outline Package

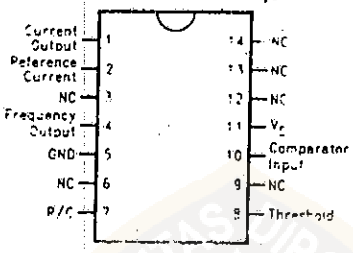

TL/H/5680-24

Top View

Order Number LM231WM
See NS Package Number M14B

Schematic Diagram

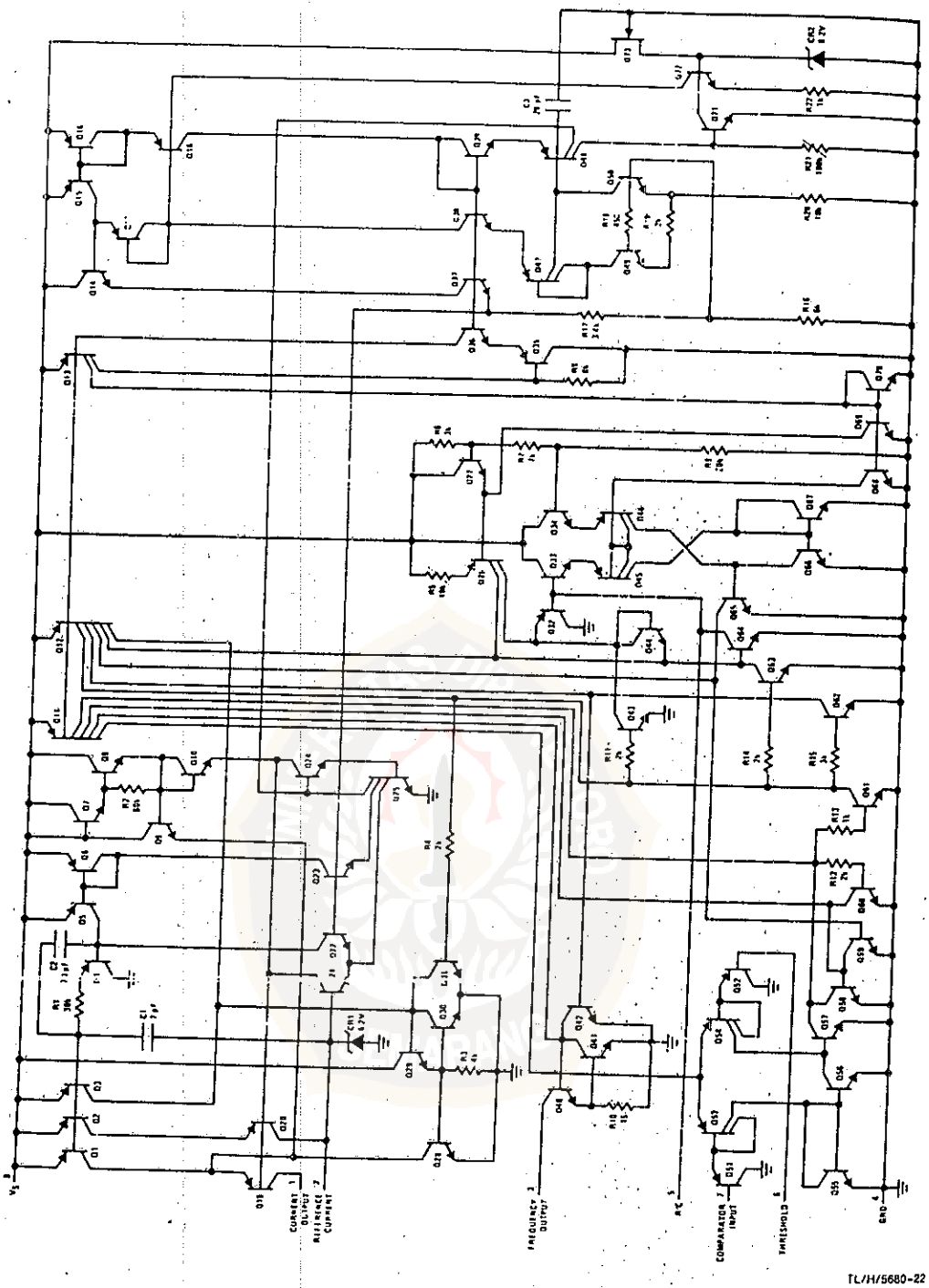

UCAPAN TERIMA KASIH

Terima kasih yang sebesar-besarnya pada Tuhan Yang Maha Esa, juga pada ortu dan keluarga (Tegal) yang banyak memberikan dorongan dan semangatnya baik secara moril maupun materiil.

Ibu Sumariyah yang telah banyak membantu dan bersedia menggantikan posisinya Pak Tony sebagai Pembimbing Pendamping. Bapak Soenarto makasih atas arahannya (ngengetin masalah dasar-dasarnya). Lilik Iskandar makasih atas terjemahannya. Buat Iwan makasih atas kebersamaan dan ngijinin numpang force one-nya. Gunarto makasih banget atas masukan dan triknya. Buat Jatmiko makasih udah mau dititipin beli NTC di Jogja. Buat Heru Menwa kapan kita ke ITB lagi ? Pak Eko dosen Politek makasih udah mau ngasih pinjem serat optik (walaupun nggak boleh dibawa keluar). Suryono makasih juga saran dan masukannya. Buat Solikin makasih atas joke-joke koplaknya. Cak Nur, Kang Gufron dan Pak Hartono makasih banget atas pinjaman alat-alat Labnya.

Anak-anak yang ada di Qori Rental tak kecuali Kang Toro (Simin) dan Bambang (Lambang) makasih banget komputernya. Maskhuri mbok ojo nge-game karo turu wae (gek cepet nggarap TA). Buat anak kost sebelah seperti Yuli, Asih, Leni, Dewi, Rita, Heri yang selalu nanya kapan luluse mas ?

Percetakan yang ada di Banjarsari makasih banget atas peran sertanya sehingga saya dapat diwisuda bulan Pebruari '98. Buat foto kopinya Kang Agung thank's atas kortingannya.

Akhirnya kepada semua pihak yang telah banyak membantu semoga mendapat berkah dan pahala dari-Nya.

Amiin ...

Uky Yudatama, S.Si

DAFTAR RIWAYAT HIDUP

Uky Yudatama, S.Si . lahir di Tegal-Jawa Tengah, pada tanggal 5 Oktober 1972. Tamat Sarjana Sains dari Universitas Diponegoro Semarang di Jurusan Fisika (**Elektronika dan Instrumentasi**) tahun 1998 dengan predikat sangat memuaskan untuk bidang **Optoelektronik**. Judul T.A yang diambil "**Rancang Bangun Transceiver Untuk Transmisi Data Melalui Serat Optik** (*Fiber Optic Telemetry*)". Jauh sebelum meraih gelar kesarjanaannya semasa kuliah aktiv diberbagai bidang kegiatan, baik di kampus maupun di luar kampus. Pada tahun 1993 sudah menjadi Asisten dan dua tahun berikutnya tepatnya tahun 1995 menjadi Asisten Luar Biasa di Laboratorium Fisika Dasar Universitas Diponegoro Semarang. Tahun 1994 diberi kepercayaan untuk mejadi Ketua Bidang Kesejahteraan Mahasiswa di Senat Mahasiswa Fakultas MIPA UNDIP Semarang, tahun 1995 menjadi Kepala Biro Kesejahteraan Mahasiswa di Badan Perwakilan Mahasiswa Fakultas MIPA UNDIP Semarang, dan pada tahun yang sama diberi kepercayaan sebagai Kepala Biro Penelitian dan Pengkajian di Forum Dinamika Mahasiswa DPD I AMPI Jawa Tengah. Selama 2 tahun (1994-1996) memperoleh Bea Siswa dari PT. INDOCEMENT TUNGGAL PRAKARSA JAKARTA.